COBHAM

# EXPLORER 8000 series Drive-Away VSAT Terminal

## User & installation manual

# EXPLORER 8000 series
# Drive-Away VSAT Terminal

User & installation manual

**Document number**: 98-145510-C
**Release date**: 6 October 2016

## Disclaimer

Any responsibility or liability for loss or damage in connection with the use of this product and the accompanying documentation is disclaimed by Thrane & Thrane A/S. The information in this manual is provided for information purposes only, is subject to change without notice and may contain errors or inaccuracies. Manuals issued by Thrane & Thrane A/S are periodically revised and updated. Anyone relying on this information should acquire the most current version e.g. from www.cobham.com/satcom, **Service and support**, or from the distributor. Thrane & Thrane A/S is not responsible for the content or accuracy of any translations or reproductions, in whole or in part, of this manual from any other source. In the event of any discrepancies, the English version shall be the governing text.

Thrane & Thrane A/S is trading as Cobham SATCOM.

## Copyright



## Trademark acknowledgements

- EXPLORER is a registered trademark of Thrane & Thrane A/S in the European Union and the United States.
- Other product and company names mentioned in this manual may be trademarks or trade names of their respective owners.

# Safety summary

The following general safety precautions must be observed during all phases of operation, service and repair of this equipment. Failure to comply with these precautions or with specific warnings elsewhere in this manual violates safety standards of design, manufacture and intended use of the equipment, and will void the warranty. Thrane & Thrane A/S assumes no liability for the customer's failure to comply with these requirements.

**WARNING!** **Heavy weight** - Do not attempt to lift the antenna alone! Use two or more persons or a lifting device. The antenna can weigh up to 70 kg and is difficult to handle.

**WARNING!** **Hazardous moving parts -** keep fingers and other body parts away from the antenna while the system is powered!

**WARNING!** Be aware of **pinch points** while the antenna is being positioned, deployed or stowed.

### Power supply

The voltage range for the EXPLORER 8000 series is 100 – 240 VAC (nominal), 50/60 Hz. The socket-outlet shall be installed near the equipment and shall be accessible. See also *System power supply range (input via ACU)* and *Total system power consumption* on page A-1.

**WARNING!** Before disassembling or performing any maintenance or upgrades, unplug the unit from the power source.

### Grounding

**WARNING!** Always **connect your ACU to the safety ground** of your power source (e.g. generator, inverter, line outlet etc.).

### Do not operate in an explosive atmosphere

**WARNING!** Do not operate the equipment in the presence of flammable gases or fumes. Operation of any electrical equipment in such an environment constitutes a definite safety hazard.

### Keep away from live circuits

Operating personnel must not remove equipment covers. Component replacement and internal adjustment must be made by qualified maintenance personnel. Do not replace components with the power cable connected. Under certain conditions, dangerous voltages may exist even

with the power cable removed. To avoid injuries, always disconnect power and discharge circuits before touching them.

### Install and use the antenna with care

Thrane & Thrane A/S assumes no liability for any damage caused by the antenna falling off the vehicle or stressing the mounting base. It is the responsibility of the customer to ensure a safe and correct installation of the antenna. The instructions in this manual are only guidelines.

### Service

User access to the interior of the system units is not allowed. Only a technician authorized by Cobham SATCOM may perform service - failure to comply with this rule will void the warranty.

### Microwave radiation hazards

During transmission the antenna radiates Microwave Power.This radiation may be hazardous to humans close to the antenna. During transmission, make sure that nobody gets closer than the recommended minimum safety distance.

**WARNING!** This device emits radio frequency energy. **Do not place your head or other body parts** between transmitting feed horn and reflector when the system is operational. Also do not place any objects between feed horn and reflector, as the object may reflect the signal in a different direction than the focal line.

The minimum safe distance applies in a cylinder between the reflector and satellite, parallel with the feed arm (see Figure 1 below). No hazard exists at the back of the reflector. The safe distance varies with the BUC version and the reflector size, see Table 1 on the next page.

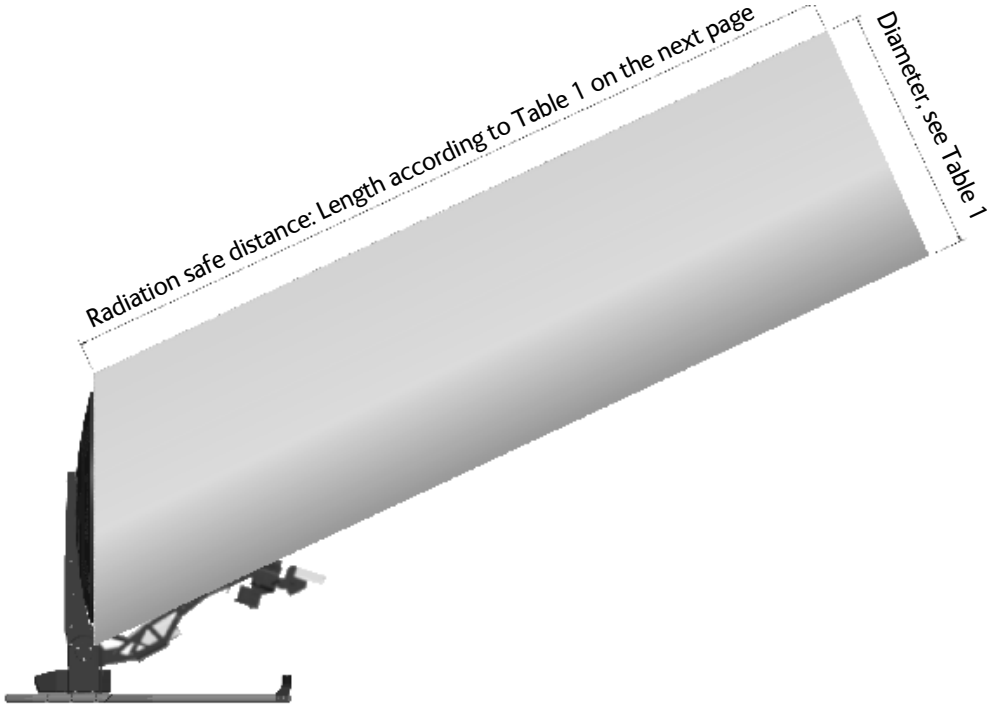


Figure 1: Radiation area

**Minimum safe distances**:

| Product | Variant | Safe distance, General public[a] | Safe distance, trained professional operators, short term[b] | Diameter of radiation area |
|---|---|---|---|---|
| EXPLORER 8100 | Ku-band, 8 W BUC | 30 m | 1 m | 1200 mm |
| | Ku-band, 20 W BUC | 49 m | 1 m | |
| | Ku-band, no BUC | Depends on BUC, see Figure 2 below | | |
| | Ka-band | 36 m | 1 m | |
| EXPLORER 8120 | Ku-band, 8 W BUC | 35 m | 1 m | 1400 mm |
| | Ku-band, 20 W BUC | 58 m | 1 m | |
| | Ku-band, no BUC | Depends on BUC, see Figure 2 below | | |

Table 1: Minimum safe distances

a. Uncontrolled environment, based on a radiation level of 10 W/m$^2$
b. Controlled environment, based on a radiation level of 100 W/m$^2$

For different BUCs for the EXPLORER 8120, read the safe distance below in Figure 2.

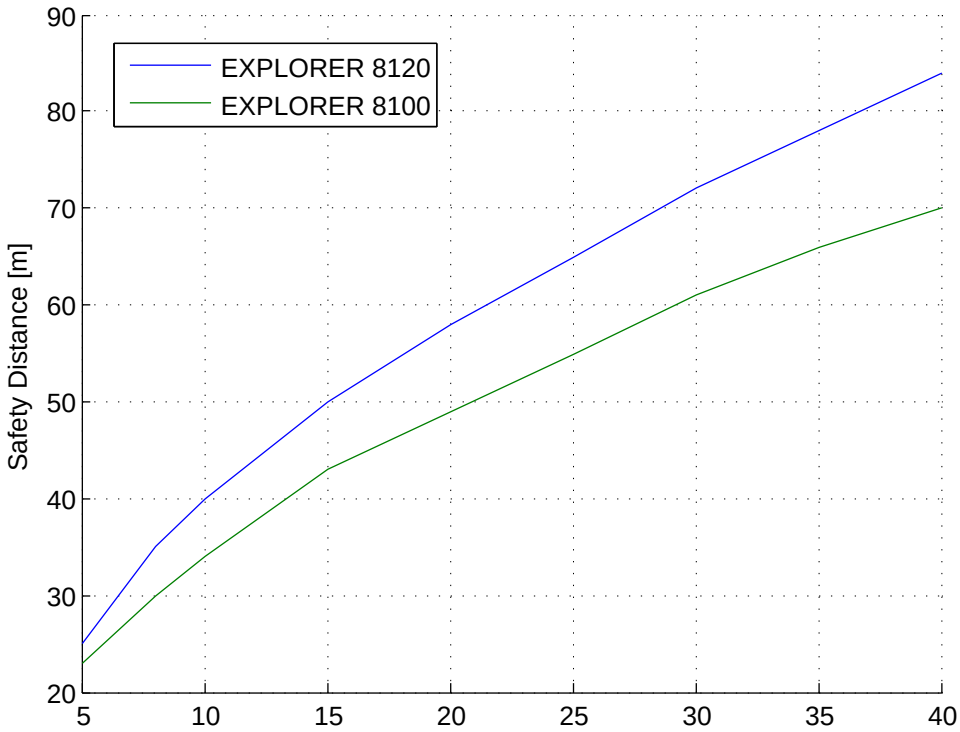


Figure 2: EXPLORER 8120 Safety distance versus BUC power

## Mechanical “stay-clear” area, EXPLORER 8100

**WARNING!** Stay clear of the antenna when it is powered! The antenna dish can move quickly across a large area, and can cause injury to persons close to the antenna. When the antenna is powered, make sure nobody gets closer than the limits of the “Stay-clear area” shown below.

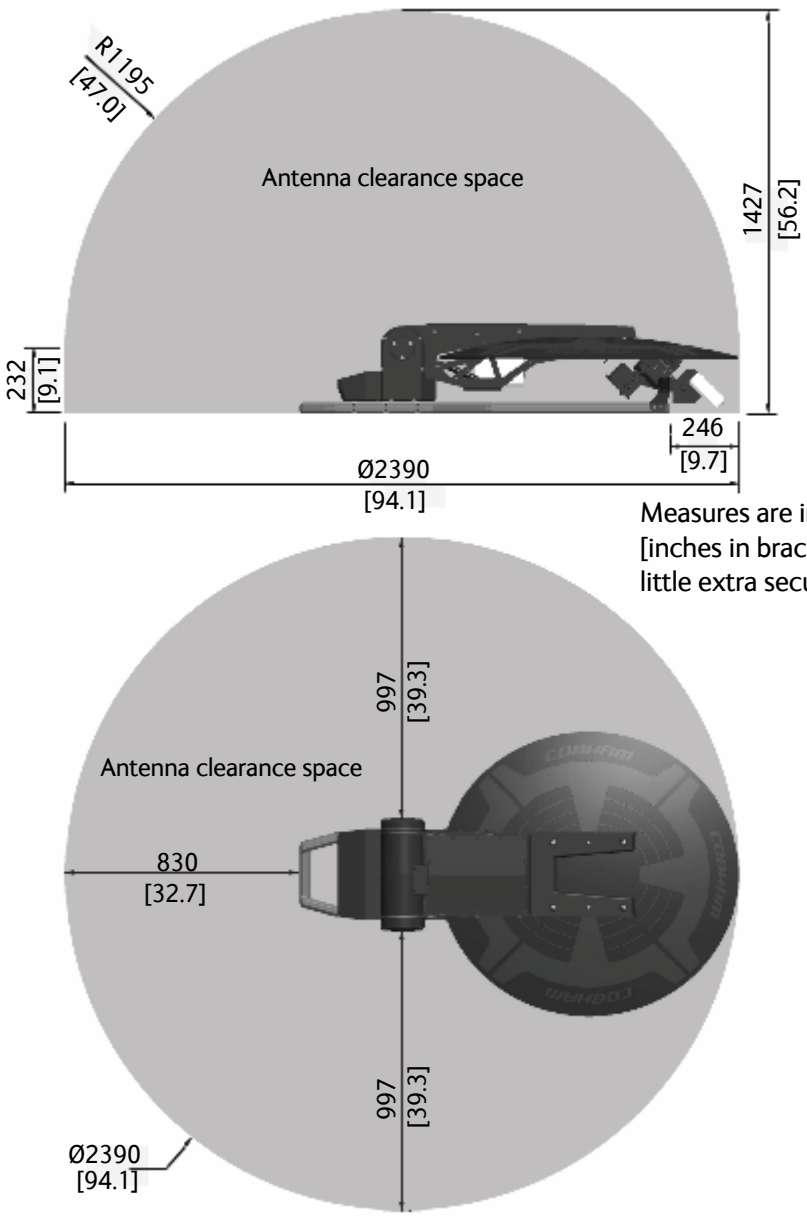


Measures are in millimeter [inches in brackets]. Add a little extra security margin.

Figure 3: Stay-clear area for the EXPLORER 8100 antenna

## Mechanical “stay-clear” area, EXPLORER 8120

**WARNING!** Stay clear of the antenna when it is powered! The antenna dish can move quickly across a large area, and can cause injury to persons close to the antenna. When the antenna is powered, make sure nobody gets closer than the limits of the “Stay-clear area” shown below.

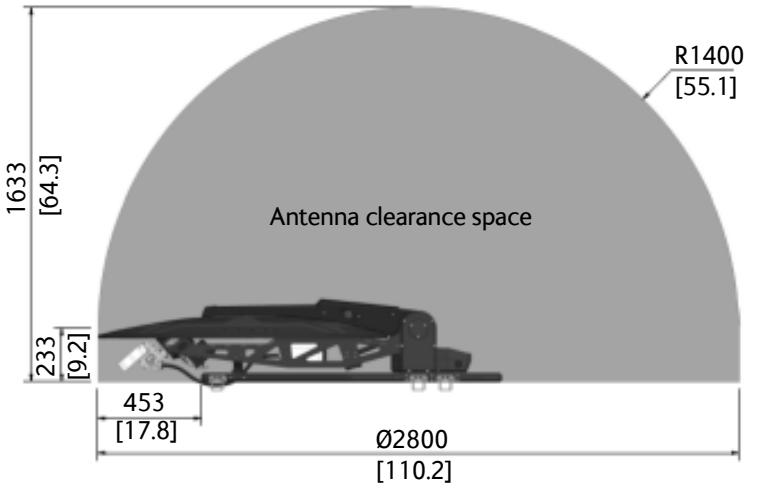


Measures are in millimeter [inches in brackets]. Add a little extra security margin.

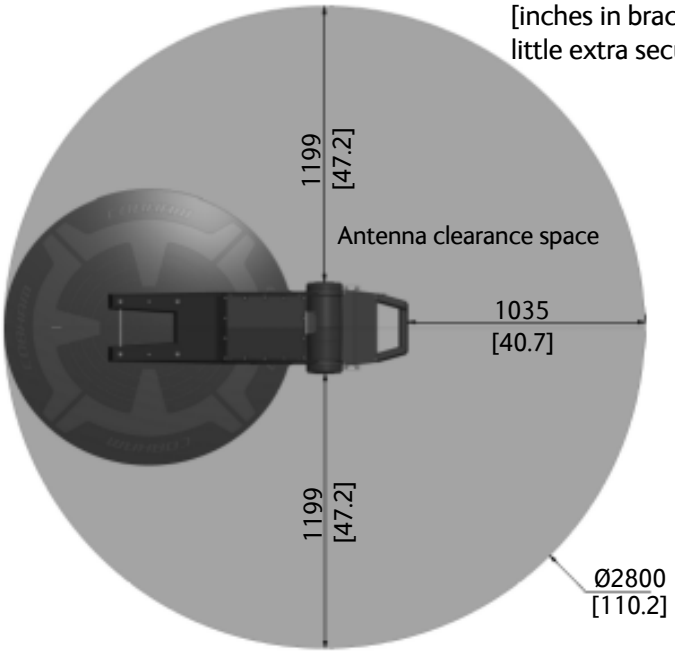


Figure 4: Stay-clear area for the EXPLORER 8120 antenna

# Table of contents

# About this manual

## 1.1 Manual overview

This manual has the following chapters:

- *Introduction*
- *Installation*
- *Interfaces*
- *Initial setup and basic functions*
- *Setup and operation*
- *Service and maintenance*

This manual has the following appendices:

- *Technical specifications*
- *VSAT modem cables*
- *VSAT modem settings*
- *Command line interface*
- *System messages*
- *DVB-S/DVB-S2 satellites for Ku-Band*
- *Approvals*

### 1.1.1 Intended readers

This is an installation and user manual for the EXPLORER 8100 and EXPLORER 8120 systems, intended for installers and users of the system. It is important that you observe all safety requirements listed in the beginning of this manual, and install and use the system according to the guidelines in this manual.

Service that requires access to the interior of the system units may only be performed by a technician authorized by Cobham SATCOM.

### 1.1.2 Software version

This manual is intended for **EXPLORER 8100** and **EXPLORER 8120** with software version **1.57** (Antenna and ACU). The modem software version is shown in its own web interface.

### 1.1.3 Typography

In this manual, typography is used as indicated below:

**Bold** is used for the following purposes:

- To emphasize words.
  Example: “Do **not** touch the antenna”.
- To indicate what the user should select in the user interface.
  Example: “Select **SETTINGS** > **LAN**”.

***Italic*** is used to emphasize the paragraph title in cross-references.

## 1.2 Precautions

Text marked with “Warning”, “Caution”, “Note” or “Important” show the following type of data:

- **Warning**: A Warning is an operation or maintenance procedure that, if not obeyed, can cause injury or death.
- **Caution**: A Caution is an operation or maintenance procedure that, if not obeyed, can cause damage to the equipment.
- **Note**: A Note gives information to help the reader.
- **Important**: A text marked Important gives information that is important to the user, e.g. to make the system work properly. This text does not concern damage on equipment or personal safety.

All personnel who operate equipment or do maintenance as specified in this manual must know and follow the safety precautions. The warnings and cautions that follow apply to all parts of this manual.

See also the *Safety summary* on page iii.

**WARNING!** Before using any material, refer to the manufacturers’ material safety data sheets for safety information. Some materials can be dangerous.

**CAUTION!** Do not use materials that are not equivalent to materials specified by Cobham SATCOM. Materials that are not equivalent can cause damage to the equipment.

# Introduction

This chapter has the following sections:

- *EXPLORER 8000 series Drive-Away VSAT System*
- *Description of the system components*
- *Part numbers*

## 2.1 EXPLORER 8000 series Drive-Away VSAT System

### 2.1.1 Overview

The EXPLORER 8000 series is a series of drive-away VSAT antenna systems for vehicle roof mounting. It comes in the following versions:

- EXPLORER 8100 (1 m reflector):
  - Ku Band with 8 W BUC
  - Ku Band with 20 W BUC
  - Ku Band with no BUC
  - Ka Band (Viasat eTRIA)
- EXPLORER 8120 (1.2 m reflector):
  - Ku Band with 8 W BUC
  - Ku Band with 20 W BUC
  - Ku Band with no BUC

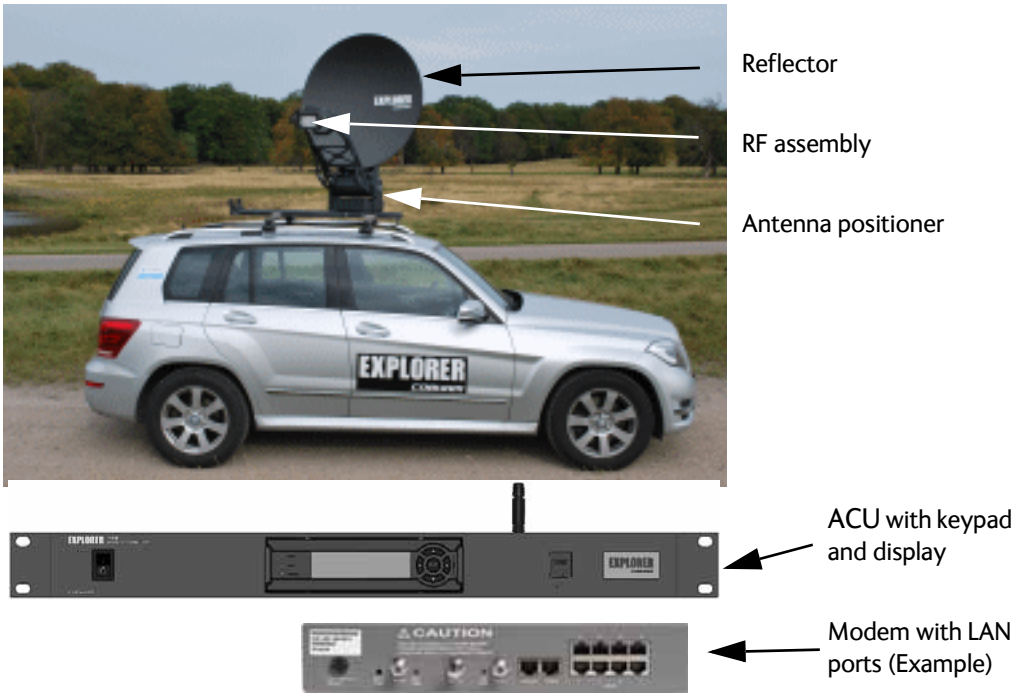


Figure 2-1: Major system components, example with EXPLORER 8100

The auto-deploy system allows personnel with minimal satellite experience to easily configure and operate this terminal enabling the user to access any broadband application over satellite.

The EXPLORER VSAT systems are easy to install, set up, and commission by a non-specialist technician. The system has the following system units:

1. One 2-axis semi-stabilized antenna for either Ku or Ka VSAT satellites.
2. One 1-Rack-Unit Antenna Control Unit (ACU) containing keypad and display and LAN/WLAN ports for system access and internal communication.

**VSAT modem**: Apart from the two units that make up the EXPLORER VSAT system, you need a VSAT modem to provide the IP services on the RF link. For a list of supported VSAT modems see *VSAT modem unit* on page 2-10.

The antenna provides a stable RF link and the modem provides services on the RF link.

## 2.1.2 Satellite service

**The EXPLORER 8100** operates in the Ku-band (10.7 to 14.5 GHz) or the Ka-band (Viasat eTRIA,19.7 to 30 GHz), depending on the EXPLORER 8100 model.

**The EXPLORER 8120** operates in the Ku-band (10.7 to 14.5 GHz).

Service capabilities are determined by the connected VSAT modem.

## 2.1.3 Service activation

The service is activated by your service provider. For details, contact your service provider.

# 2.2 Description of the system components

## 2.2.1 Antenna pedestal/positioner

Antenna pointing is achieved with a 2-axis semi-stabilized pedestal. The Azimuth drive comprises a dual gear and belt drives, the Elevation drive a dual gear. Both drives have a manual stow function. An emergency stop button is placed on the side of the antenna.

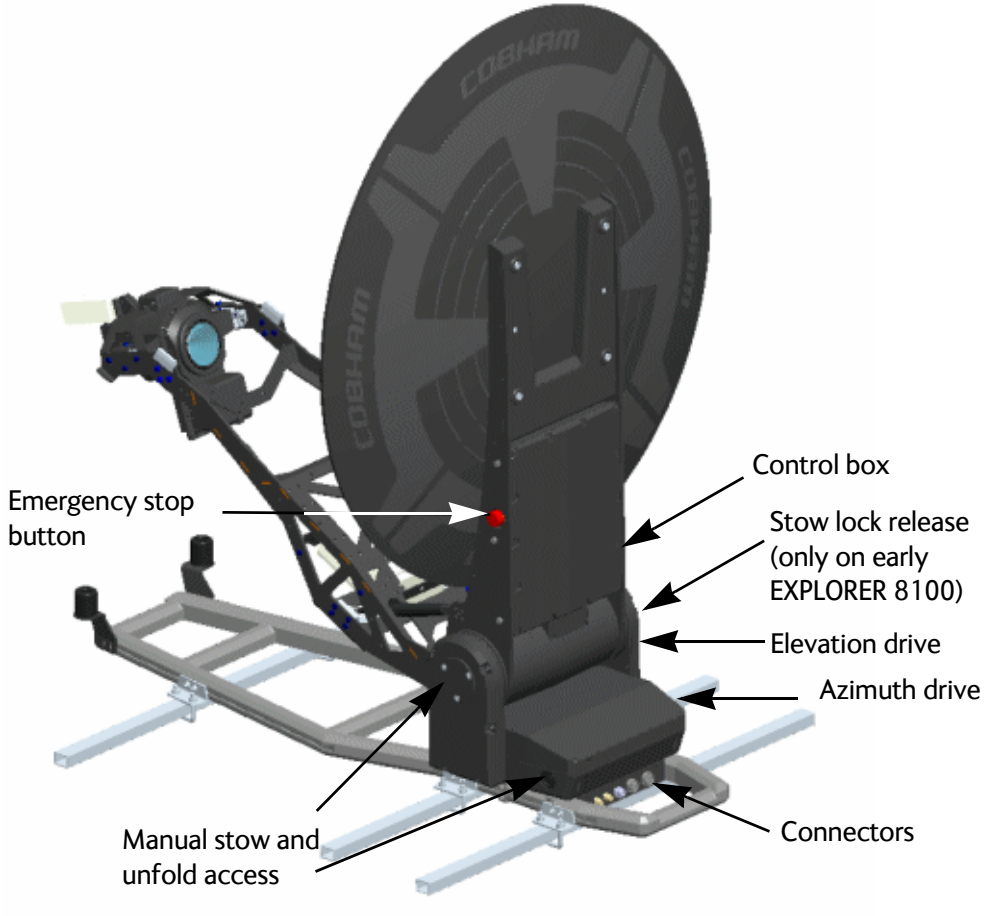


Figure 2-2: EXPLORER 8100 antenna system components, part 1

The location of the EXPLORER 8120 system components is the same as on the EXPLORER 8100 shown above.

Deployment of the antenna unfolds the Reflector- and Feed support structure. The Feed position is controlled by 2 gas-springs, which are compressed when the antenna is in stowed position. Internal cable-wraps are included in both drives, whereas the Feed and GNSS antenna connecting cables are exposed on the Feed Support Structure.

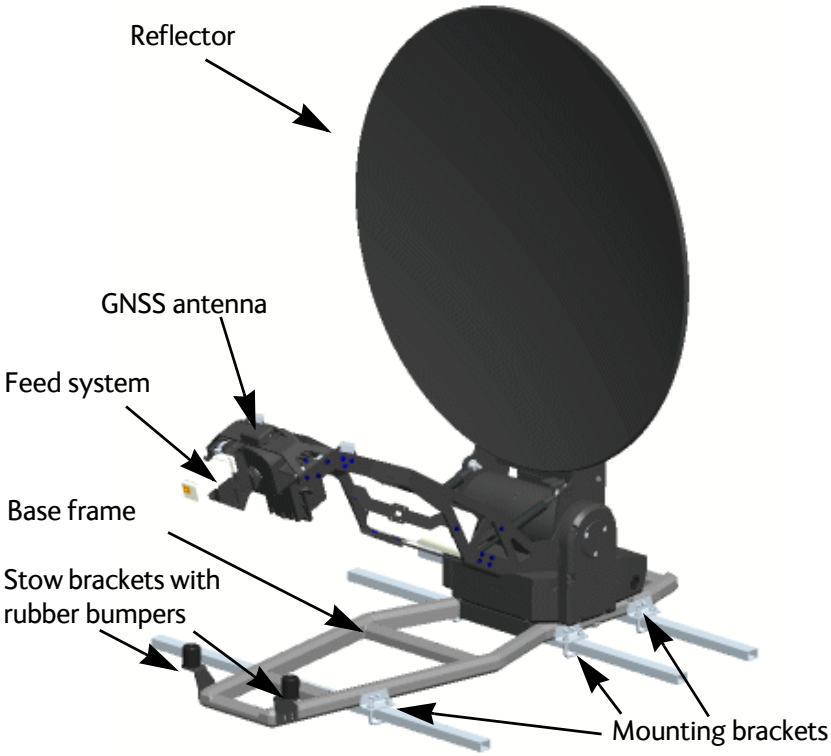


Figure 2-3: EXPLORER 8100 antenna system components, part 2

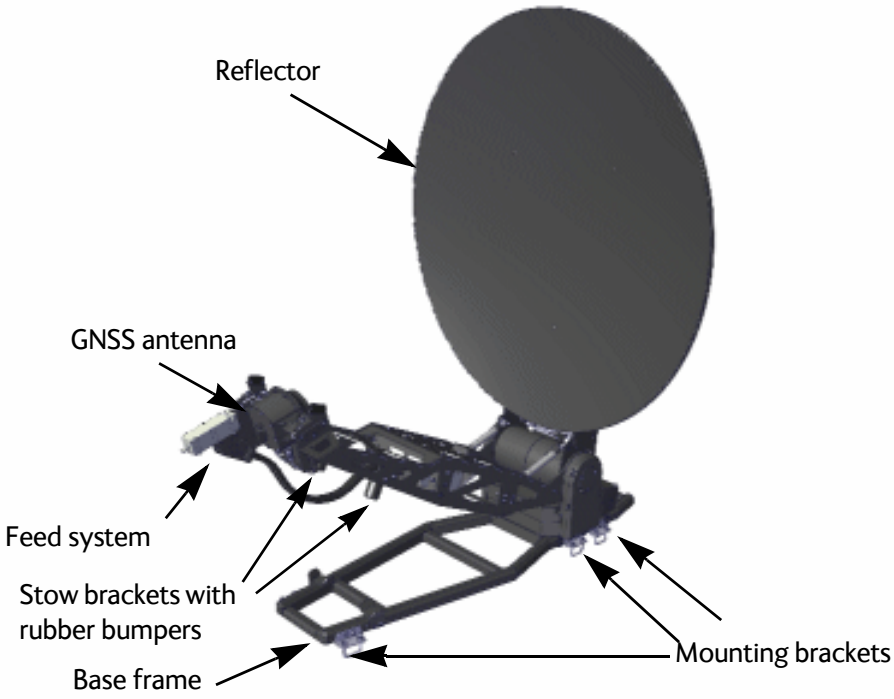


Figure 2-4: EXPLORER 8120 antenna system components, part 2

## 2.2.2 Reflector and RF assembly

The RF assembly varies depending on the antenna type. The following pages show the RF assemblies for EXPLORER 8100 Ku-Band, EXPLORER 8120 Ku-Band and EXPLORER 8100 Ka-Band.

### Ku-Band RF assembly

The Ku version features a distributed RF system with a Block Up Converter (BUC) placed in the middle of the Feed support structure, connected to the Feed (Ortho Mode Transducer (OMT)/Low Noise Blockdown converter (LNB)) via a Flexible Wave Guide (FWG). A motor driven Polarizer is present.

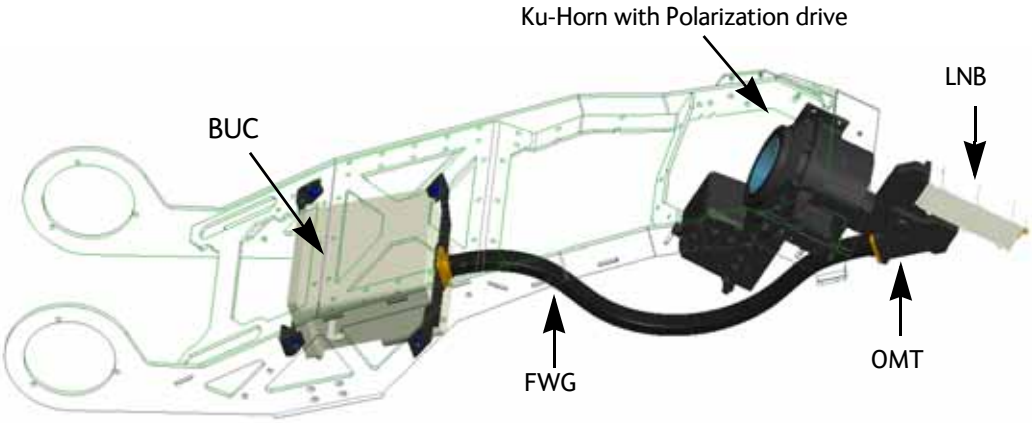


Figure 2-5: Components of the EXPLORER 8100 Ku-Band RF assembly

The location of the RF components are the same on the EXPLORER 8120 as on the EXPLORER 8100 shown above.

### Ka-Band RF assembly

In the Ka Eutelsat/Viasat version, the components in the RF assembly are integrated in a monolithic Transmit and Receive Integrated Assembly (eTRIA) unit, placed at the end of the Feed arm. For specifications on the eTRIA, see *ViaSat eTRIA* on page A-10.

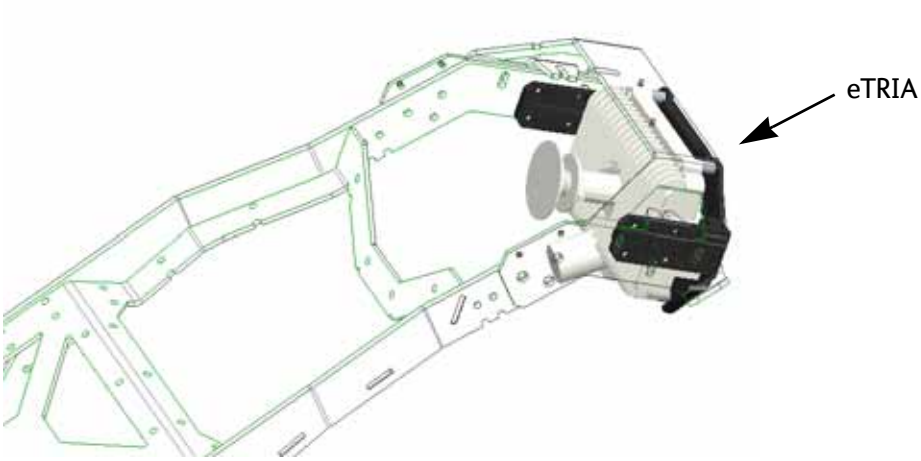


Figure 2-6: Components of the Ka-Band RF assembly

## 2.2.3 Antenna Control Unit (ACU)

### ACU

The ACU manages all communication between the antenna and the connected modem. The ACU has status LEDs, a display and a keypad. It also provides a flexible configurable LAN interface (DHCP client/server, static IP address etc.) and a built-in web interface for configuration of the system.

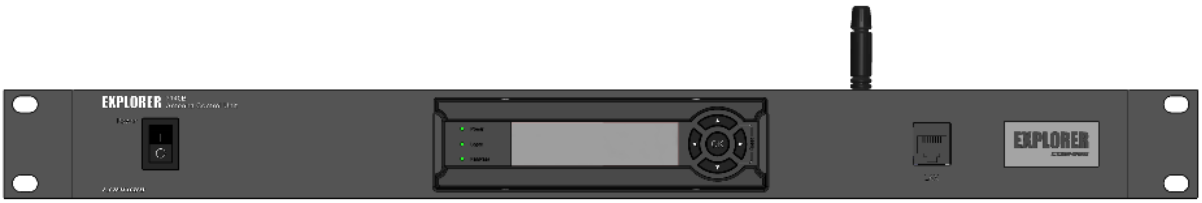


Figure 2-7: ACU front panel

For details of the interfaces of the ACU, see *Interfaces of the Antenna Control Unit (ACU)* on page 4-1.

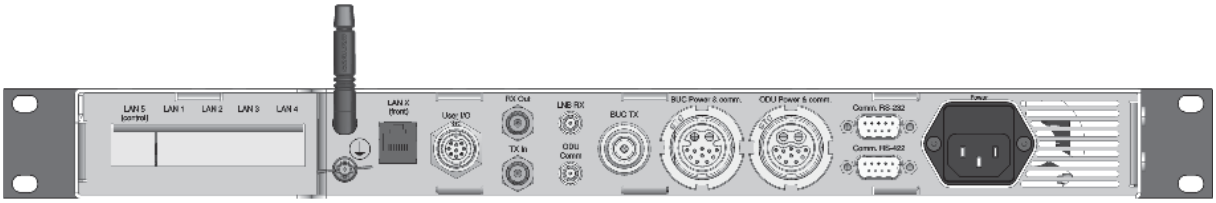


Figure 2-8: ACU connector panel

## 2.2.4 Keypad and display

Using the keypad and display on the ACU you can deploy, stow and stop the antenna, including monitoring the system (warnings, errors and information). See *Keypad and display menus* on page 6-27 for a full list of menus and details on how to use the display and keypad.

The menus show how the system has been configured. You can also see events (warnings, errors and information). Signal strength indication is rendered on the display as 7 blocks on the main display.


Figure 2-9: Keypad and display (detailed, example)

The display has a two line menu system. The display also supports two status lines (Upper and Lower) for compact satellite and antenna information. For a description of the LED light indicators see *LEDs on the keypad of the ACU* on page 7-9.

## 2.2.5 Web interface

The VSAT system has a built-in web interface, which has two levels:

- **Mobile web interface**, used for basic operations and status. Accessed from a smartphone or tablet.
- **Computer web interface**, used for configuration, line-up, troubleshooting, extended status information etc. Accessed from a computer.

### Mobile web interface

When you access the web interface from a smartphone or tablet you get access to the mobile web interface, which offers the following basic operations and status:

- Deploy, Stow and Stop the antenna
- Activate satellite profile
- See status and events
- Access the full web interface

**To access the mobile web interface**:

1. Connect your smartphone or tablet to the WLAN access point of the ACU. For information on WLAN setup see *WLAN settings* on page 6-16.
2. In the browser of your smartphone or tablet, type in the IP address for the web interface. By default the IP address is http://192.168.0.1.


Figure 2-10: Mobile web interface, for basic operation

## Web interface for setup and troubleshooting

To fully configure the VSAT system, use a computer with a standard Internet browser to access the built-in web interface.

The web interface is mainly used for calibration of the system, first-time setup of satellite and modem profiles, setup of the LAN ports, WLAN use and administrating admin and guest access rights. You can also deploy, stow and stop the antenna, and monitor the system (warnings, errors and information) with the web interface.

The web interface can be accessed using LAN or WLAN, if configured. see *WLAN settings* on page 6-16. Note that you must use the LAN connection when you first configure the WLAN interface.

**To access the web interface**:

1. Connect your computer to the LAN 1 or WLAN interface. For details on LAN/WLAN interface setup see *To configure the LAN network* on page 6-14.
2. Enter the IP address for the web interface. The default IP address is http://192.168.0.1.

For details about further configuration and use, see *Setup and operation* on page 6-1.

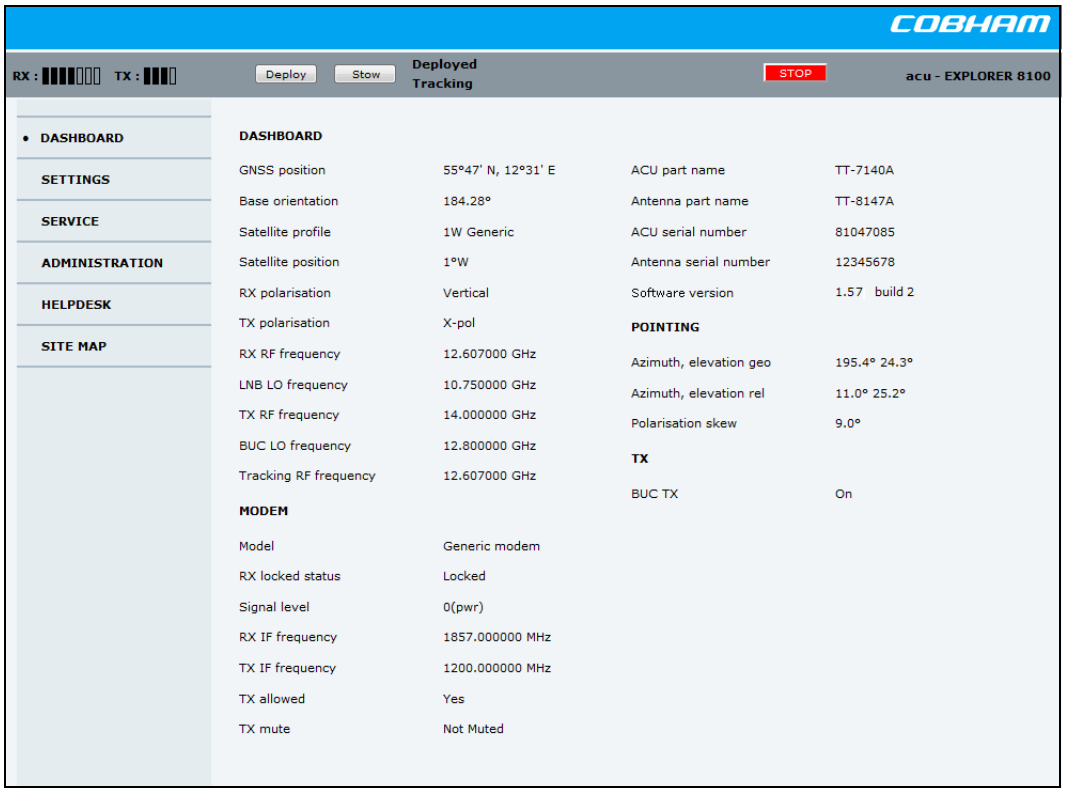


Figure 2-11: Web interface, DASHBOARD (example, EXPLORER 8100 Ku-Band)

## 2.2.6 LAN ports and WLAN

The ACU has five configurable LAN connectors (type RJ45). LAN 2, LAN 3 and LAN 5 are switched, i.e. the configuration for LAN 5 also applies to LAN 2 and LAN 3.

The default configuration is as follows:

- LAN 1 is used for system control via the web interface.
  If you want to use the front connector instead of LAN 1, connect the short LAN cable (37-206570-025) between LAN 1 and LAN X (Front) in the connector panel. LAN X is internally connected to the front LAN connector.
- LAN 5 is used to connect to the VSAT modem.
- LAN 4 is configured as a DHCP client.

The ACU has a WLAN module. Access to one of the LAN ports using WLAN must be set up in the web interface, see *To configure the LAN network* on page 6-14.

## 2.2.7 Power supply

The power input for the ACU and modem is specified as follows: Nominal:100-240 VAC, 50/60 Hz, using IEC320 connector. The antenna is powered by the ACU.

## 2.2.8 VSAT modem unit

The EXPLORER 8000 series is designed to be operated with third-party VSAT modems.

### VSAT modems for Ku Band

The following VSAT modems are supported: for **Ku-Band**:

- iDirect OpenAMIP (iNFINITY/Evolution)
- iDirect Serial (iNFINITY/Evolution)
- Comtech CDM-570/625
- Gilat SkyEdge II
- STM SatLink 2900

Additional VSAT modems may also be supported using the “Generic modem” or “Generic OpenAMIP” setup in the web interface of the VSAT system.

- **Generic OpenAMIP**: Used for OpenAMIP modems that are not in the dropdown list (e.g. Newtec). This profile uses the information from the modem.
- **Generic modem**: Used for other modems that are not in the list. You must enter the information manually in this profile.

A **Service modem** profile is also available, e.g. for situations where a reference satellite is needed, see *To use a reference satellite (Ku only)* on page 6-9.

### VSAT modem for Ka Band

The following VSAT modem is supported for **Ka-Band**:

- Surfbeam II Pro

# 2.3 Part numbers

## 2.3.1 EXPLORER 8100 system

### System part numbers

The following EXPLORER 8100 system part numbers are available:

| Part number | Description | ACU | Antenna |
|---|---|---|---|
| 408157A-50011 | EXPLORER 8100 Ku VSAT System (no BUC, 500 W ACU) | EXPLORER Antenna Control Unit, 500 W | EXPLORER 8100 Ku VSAT Antenna (no BUC) |
| 408157A-50013 | EXPLORER 8100 Ku VSAT System (no BUC, 1000 W ACU) | EXPLORER Antenna Control Unit, 1000 W | EXPLORER 8100 Ku VSAT Antenna (no BUC) |
| 408157A-50211 | EXPLORER 8100 Ku VSAT System (8 W BUC, 500 W ACU) | EXPLORER Antenna Control Unit, 500 W | EXPLORER 8100 Ku VSAT Antenna (8 W BUC) |
| 408157A-50313 | EXPLORER 8100 Ku VSAT System (20 W BUC, 1000 W ACU) | EXPLORER Antenna Control Unit, 1000 W | EXPLORER 8100 Ku VSAT Antenna (20 W BUC) |
| 408157B-50551 | EXPLORER 8100 Ka VSAT System | EXPLORER Antenna Control Unit, 500 W | EXPLORER 8100 Ka VSAT Antenna (Viasat eTria) |

Table 2-1: System part numbers for the EXPLORER 8100 systems

## 2.3.2 EXPLORER 8120 system

### System part numbers

The following EXPLORER 8100 system part numbers are available:

| Part number | Description | ACU | Antenna |
|---|---|---|---|
| 408158A-50013 | EXPLORER 8120 Ku VSAT System (No BUC, 1000 W ACU) | EXPLORER Antenna Control Unit, 1000 W | EXPLORER 8120 Ku VSAT Antenna (No BUC) |
| 408158A-50211 | EXPLORER 8120 Ku VSAT System (8 W BUC, 500 W ACU) | EXPLORER Antenna Control Unit, 500 W | EXPLORER 8120 Ku VSAT Antenna (8 W BUC) |
| 408158A-50313 | EXPLORER 8120 Ku VSAT System (20 W BUC, 1000 W ACU) | EXPLORER Antenna Control Unit, 1000 W | EXPLORER 8120 Ku VSAT Antenna (20 W BUC) |

Table 2-2: System part numbers for the EXPLORER 8120 systems

# Installation

This chapter has the following sections:

- *To unpack the system*
- *To install the EXPLORER 8000 series*

## 3.1 To unpack the system

The antenna is attached to the bottom of the transport box. To unpack the antenna you must remove the screws attaching the antenna to the packing material.

**WARNING!** **Heavy weight** - Do not attempt to lift the antenna alone! Use two or more persons or a lifting device. The antenna can weigh up to 70 kg and is difficult to handle.

**CAUTION!** Do not lift the antenna by the small metal bar on the back of the reflector. It is not designed to hold the weight of the antenna.

### 3.1.1 What's in the box

**CAUTION!** For **early versions of EXPLORER 8100 only**: Do **not** manually unfold the antenna without first releasing the stow lock! If it is necessary to unfold the antenna in order to access the screws attaching the antenna to the packing material, you must first release the stow lock as described in *Manual unfolding* on page 7-12.

Unpack the antenna and ACU and check that the following items are present:

- EXPLORER 8100 Ku VSAT antenna (no BUC, 8 W BUC or 20 W BUC), or
  EXPLORER 8100 Ka VSAT antenna (Viasat eTRIA), or
  EXPLORER 8120 Ku VSAT antenna (no BUC, 8 W BUC or 20 W BUC)
- EXPLORER Antenna Control Unit (ACU) (500 W or 1000 W)
- With the ACU:
  - AC Power cord 1.8 m, US wall plug (37-207152-000)
  - AC Mains cable 1.8 m, Schuko (Euro) wall plug (37-207148-000)
  - Ethernet cable 2 m (37-203213-A)
  - Short Ethernet cable 0.25 m (37-206570-025)
  - WLAN antenna (88-139591-A)
  - WLAN TNC key for mounting the WLAN antenna (41-140645-C)
  - Quick guide (98-146768)

- With antenna:
  - Cable harness, antenna to ACU and modem, 10 m (37-145530)
  - Hand crank for manual operation (62-147900)
  - Hex L key 4 X 142 mm for manual operation (covers and stow lock) (51-207294-000)
  - For antenna installation: 6 mounting brackets (41-145536-A) and Thule rail adapter (41-145220-A), nylon lock nuts and washers
  - **Ka only**: F-to-SMA adapter for connection to modem (31-207170-000)
  - Safety sheet (99-150490)

### 3.1.2 Initial inspection

Inspect the shipping cartons and wooden box immediately upon receipt for evidence of damage during transport. If the shipping material is severely damaged or water stained, request that the carrier's agent be present when opening the cartons and wooden box. Save all packing material for future use.

**WARNING!** To avoid electric shock, do not apply power to the system if there is any sign of shipping damage to any part of the front or rear panel or the outer cover. Read the safety summary at the front of this manual before installing or operating the system.

After unpacking the system, i.e. removing the top and sides of the wooden box and opening the cartons, inspect it thoroughly for hidden damage and loose components or fittings. If the contents are incomplete, if there is mechanical damage or defect, or if the system does not work properly, notify your dealer.

## 3.2 To install the EXPLORER 8000 series

### 3.2.1 Prerequisites

#### Vehicle

The antenna is intended for installation on a vehicle, taking advantage of the vehicle's suspension system during transport. Inadequate or no suspension, e.g. trailer mount, will require special measures - contact your dealer or factory before such installation.

Make sure the vehicle and roof rails are approved to carry the weight of the antenna. See *Weights and measures* on page A-3.

#### Magnetizable material

When you install the antenna, make sure the amount of magnetizable material close to the antenna is as small as possible, as magnetizable material could interfere with the magnetometer and affect the precision of the system. If in doubt, make a test setup prior to final manufacture of the supporting structure.

#### Line of sight

The antenna should be installed in such a way that no objects on the vehicle can block the line of sight from the antenna in any direction.

### Mechanical obstructions

Make sure there are no objects on the vehicle that can obstruct the mechanical movement of the antenna. Preferably do not place any objects within the stay-clear area shown in page vi. If you cannot avoid objects inside the stay clear area, you must define a blocking zone. For details, see *Blocking zones* on page 6-11.

## 3.2.2 Installation of the antenna on the vehicle

**WARNING**! **Heavy weight** - Do not attempt to lift the antenna alone! Use two or more persons or a lifting device. The antenna can weigh up to 70 kg and is difficult to handle.

**CAUTION**! Do not lift the antenna by the small metal bar on the back of the reflector. It is not designed to hold the weight of the antenna.

**CAUTION**! Make sure that the Azimuth base faces towards the front of the vehicle as shown in Figure 3-1 below. Otherwise the wind pressure may cause damage to the antenna when the vehicle is moving!


Figure 3-1: Position of the antenna (stowed) on the vehicle

To install the antenna to the transport vehicle do as follows:

1. Safely and securely install the antenna's mounting frame to the roof of the vehicle.

**CAUTION**! The major part of the weight is on the front end (Azimuth base) of the structure. Pay special attention to support for this area when you plan the installation.

You can mount the antenna on a roof-rack (Thule-bars) or mounted on a custom made structure/enhancement of the vehicle roof or truck bed, see *Custom made structure* on the next page. For optimum servo performance, resilience to wind loads and vehicle movements, the azimuth base should be stiffly supported.

The mounting frame of the antenna has lengthwise adjustable brackets to accommodate different placements of the supports. If you are not using a roof rack, omit the U-bars.

### Roof-rack mount

We recommend a 3-bar solution over a 2-bar solution whenever possible. Adhere to the load limits of the roof-rack manufacturer and use sturdy, professional grade racks.

### Custom made structure

Custom structures should likewise focus on supporting the azimuth base.

Avoid large amounts of magnetizable material close to the antenna - it could adversely affect the magnetometer. If in doubt, make a test setup prior to final manufacture of the supporting structure.

For measures for antenna installation, see *Measures for antenna installation* on page A-13.

See also *Weights and measures* on page A-3 and *Antenna dimensions* on page A-11.

## 3.2.3 Installation of the ACU

To install the ACU, do as follows:

1. If you are going to use WLAN, connect the WLAN antenna to the connector marked WLAN in the ACU connector panel. The WLAN antenna is part of the accessories supplied with the EXPLORER 8000 series system.

> **CAUTION!** Turn the WLAN antenna into horizontal position before sliding the unit into the rack. The WLAN antenna may be damaged if it is placed in a vertical position.

Figure 3-2: ACU connector panel with WLAN antenna

2. If you are going to use the LAN connector on the front, connect the enclosed patch cable (37-206570-025) between **LAN1** and **LANX (Front)** on the rear of the ACU.
3. Slide the ACU into a 1U space in a 19” rack.

> **Note** We recommend supporting the ACU either with rails on the side of the rack system or by attaching it with screws on the side using the 2 M4 inserts on each side of the ACU (see *ACU left and right side* on page A-19).

4. Mount the screws on each side through the holes in the front and fasten the screws to the rack. Make sure that the unit is mounted securely according to the requirements for your 19” rack.

## 3.2.4 Installation of the VSAT modem

For a list of supported VSAT modems see *VSAT modem unit* on page 2-10.

1. Mount the VSAT modem close to the ACU, preferably at a distance less than 1 m.
2. Connect all cables. See *VSAT modem settings* on page C-1 for a description of the connectors for supported VSAT modems. For cable specifications see *VSAT modem cables* on page B-1.

## 3.2.5 To connect the ACU, VSAT modem and antenna pedestal

The connections to be made depend on the VSAT system (Ku or Ka) and the VSAT modem used. The drawings on the next pages show an overview of connections in an EXPLORER 8000 series Ku system and an EXPLORER 8000 series Ka system.

- For details on how to connect the modem, see *VSAT modem settings* on page C-1.
- For details on the interfaces, see *Interfaces* on page 4-1.

### Ku-band, connections

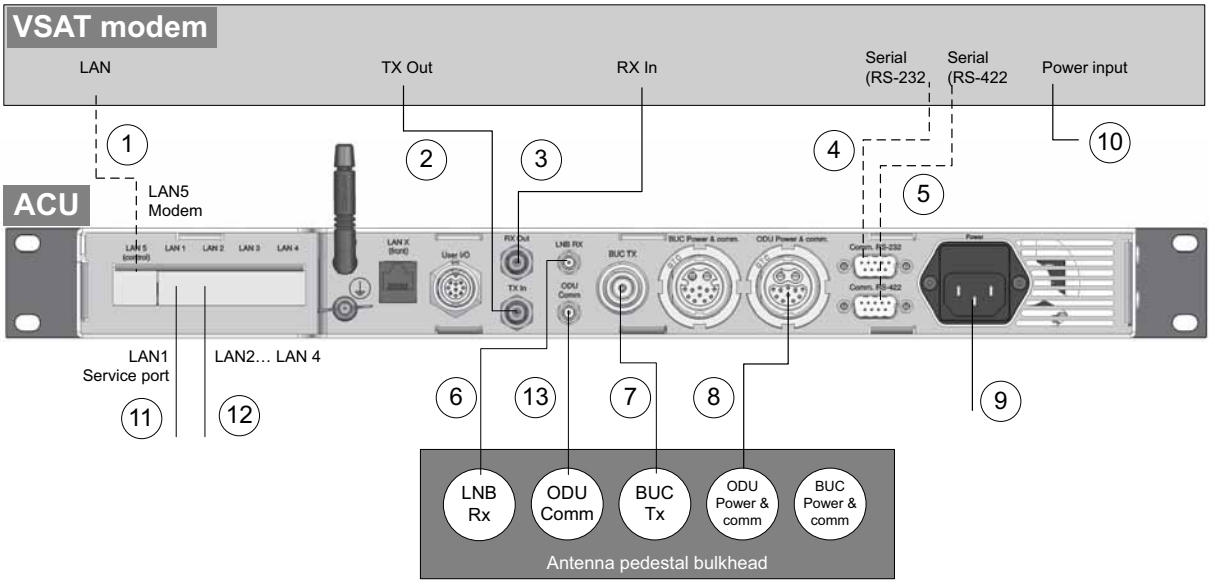


Figure 3-3: **Ku-Band**: Connection between antenna, ACU and VSAT modem

**Important** If you replace antenna cables you must make a cable calibration. See *Ku-Band version only: Cable calibration* on page 6-22.

Connect the cables as described below:

**Note** The cables 6, 7, 8 and 13 are delivered as a cable bundle.

1. If you are using LAN to connect the VSAT modem to the system, connect any LAN port on the VSAT modem to the **LAN 5** control port on the ACU.
2. Connect the VSAT modem's **Tx Out** port to the ACU's **Tx In** port.

3. Connect the VSAT modem's **Rx In** port to the ACU's **Rx Out** port.
4. If applicable, connect the VSAT modem's **RS-232** port to the ACU's **RS-232** port.
5. If applicable, connect the VSAT modem's **RS-422** port to the ACU's **RS-422** port.
6. Connect the **LNB Rx** port on the pedestal bulkhead to the ACU's **LNB Rx** port.
7. Connect the **BUC Tx** port on the pedestal bulkhead to the ACU's **BUC Tx** port.
8. Connect the **ODU Power & comm.** port on the pedestal bulkhead to the ACU's **ODU Power & comm.** port.
9. Connect the ACU to an AC power source (Standard IEC320 on ACU).
10. Connect the VSAT modem to an AC power source.
11. Use **LAN1** to access the web interface.
12. For **LAN2**, **LAN3** and **LAN4**, see *To configure the LAN network* on page 6-14.
13. Connect **ODU Comm.** on the pedestal to **ODU Comm**. on the ACU

## Ka-band, connections

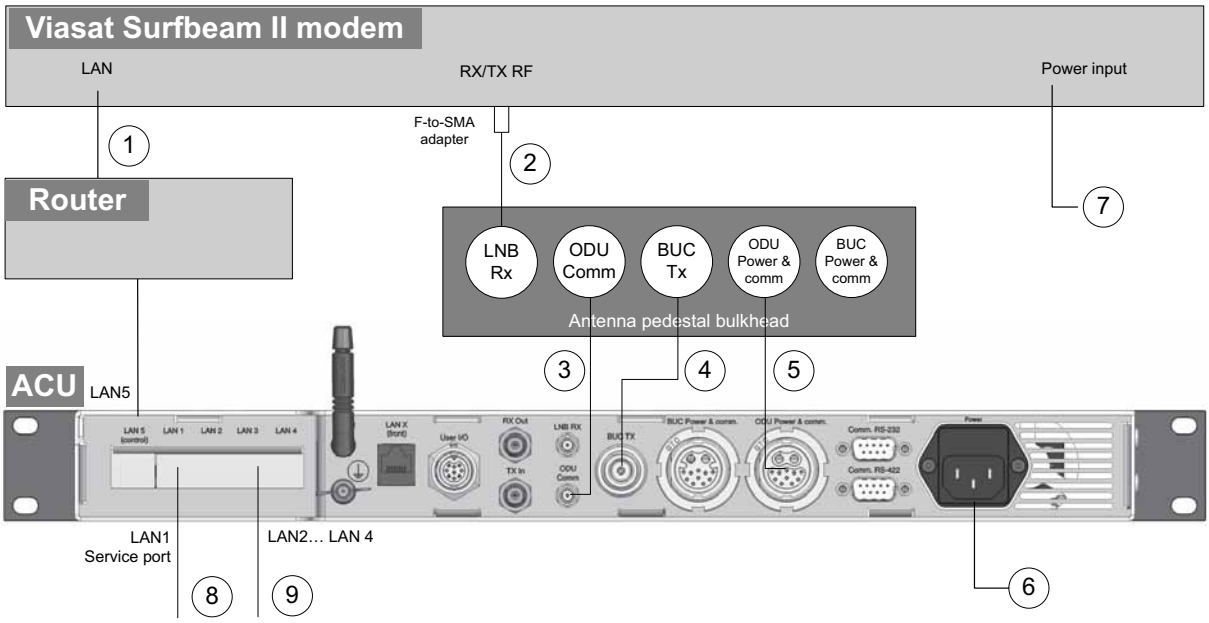


Figure 3-4: **Ka-Band**: Connection between antenna, ACU and VSAT modem

Connect the cables as described below:

**Note** The cables 2, 3, 4 and 5 are delivered as a cable harness.

1. Connect the LAN port on the VSAT modem to a router connected to the **LAN 5** control port on the ACU.
2. Connect the **RX/TX RF** connector on the VSAT modem to the **LNB RX** connector on the antenna, using the F-to-SMA adapter included in the delivery (31-207170-000).

3. Connect the **ODU Comm.** connector on the antenna to the **ODU Comm.** connector on the ACU.
4. Connect the **BUC TX** connector on the antenna to the **BUC TX** connector on the ACU (this connection is not used for the Ka-Band version, but is part of the cable bundle).
5. Connect the **ODU Power & comm.** connector on the antenna to the **ODU Power & comm.** connector on the ACU.
6. Connect the ACU to an AC power source (Standard IEC320 on ACU).
7. Connect the VSAT modem to a suitable power source.
8. Use **LAN1** to access the web interface.
9. For **LAN2**, **LAN3** and **LAN4**, see *To configure the LAN network* on page 6-14.

# Interfaces

This chapter is organized in the following sections:

- *Interfaces of the Antenna Control Unit (ACU)*
- *Interfaces of the antenna*
- *Interfaces of the VSAT modem*

## 4.1 Interfaces of the Antenna Control Unit (ACU)

### 4.1.1 WLAN interface

The ACU has a WLAN interface for wireless access to the system. To be able to use the WLAN interface, you must first set it up in the web interface, from a computer connected to the front LAN connector or LAN 1 in the connector panel of the ACU. For details, see *To configure the LAN network* on page 6-14 and *WLAN settings* on page 6-16.

### 4.1.2 LEDs, display and keypad


Figure 4-1: ACU display and keypad and LEDs

### 4.1.3 ACU Connector panel — overview

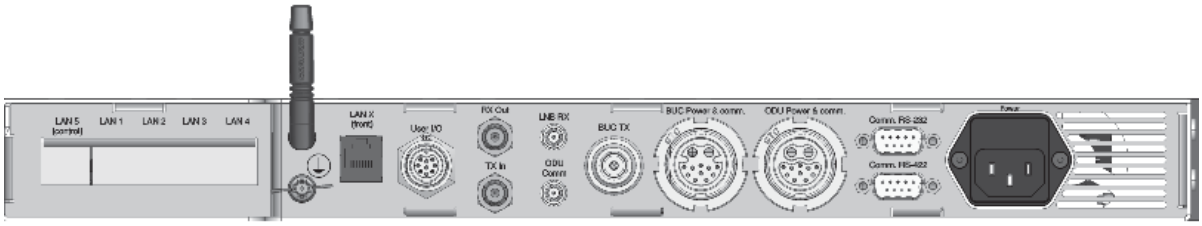


Figure 4-2: ACU connector panel overview

The connector **LAN** on the front panel is internally connected to the **LAN X** connector in the connector panel. Typically you connect **LAN X** to the service port at **LAN 1** with a straight Ethernet cable. Then you can access the service port from the front of the ACU.

### 4.1.4 AC Input connector

Provide AC power to the ACU from a standard 100-240 VAC supply using the cable included in the delivery. First find a suitable connector for your AC Mains supply and mount it on the cable according to the table below.

**CAUTION!** You must connect all three pins (Live, Neutral and Earth), in order to meet the isolation requirements for the system.

The AC connector on the ACU is an IEC320 connector for universal AC power input.

| Outline (on the ACU) | Pin function | Wire color |
|---|---|---|
| 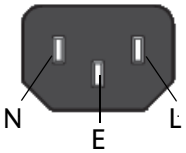  | Live (L) | Brown |
| | Neutral (N) | Blue |
| | Earth (E) | Green/Yellow |

Table 4-1: ACU AC Input connector, pin assignment

### 4.1.5 Connectors for antenna connection

A cable bundle with all necessary cables between antenna and ACU is delivered with the system. There are 5 connectors on the ACU for connection to the antenna:

- **BUC TX**: N-connector for signal and power to the BUC
- **LNB RX**: SMA-connector for signal from the LNB to the ACU and power to the LNB
- **ODU Power & comm**: Circular connector for antenna power (ODU power), stow indicator signal and internal system communication.

| Outline (on the ACU) | Pin | Pin function |
|---|---|---|
| 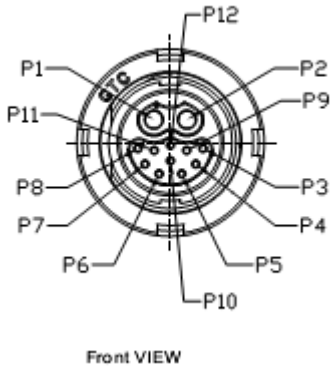 | P1 | ODU Power RTN |
| | P2 | ODU Power +48V |
| | P3 | Reserved |
| | P4 | Reserved |
| | P5 | GND |
| | P6 | Com1 antenna ID |
| | P7 | Com2 antenna ID |
| | P8 | Reserved |
| | P9 | Reserved |
| | P10 | Reserved |
| | P11 | GND |
| | P12 | Stow indicator switch |

Table 4-2: ACU Circular connector, ODU Power & comm, outline and pin assignment

- **BUC Power & Comm.**: Circular connector.

| Outline (on the ACU) | Pin | Pin function |
|---|---|---|
| 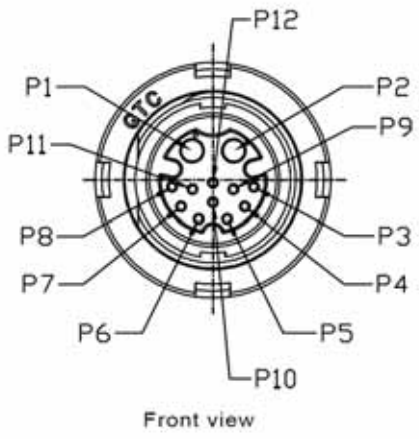 | P1 | BUC Power |
| | P2 | BUC Power Rtn |
| | P3 | GND |
| | P4 | GND |
| | P5 | BUC Serial RX- |
| | P6 | BUC Serial RX+ |
| | P7 | BUC Serial TX- |
| | P8 | BUC Serial TX+ |
| | P9 | Keyline - |
| | P10 | Band Select + |
| | P11 | Keyline + |
| | P12 | Band Select - |

Table 4-3: ACU Circular connector, BUC Power & comm, outline and pin assignment

- **ODU Comm**: SMA connector used for Housekeeping communication between the ACU and the antenna.

### 4.1.6 Rx/Tx connectors for VSAT modem

**RX Out** and **TX In** are F-connectors for connection to the Rx and Tx channels of the VSAT modem.

| Outline (on the ACU) | Pin number | Pin function |
|---|---|---|
|  | 1 | Inner conductor:<br>10 MHz clock, VSAT Rx/Tx |
| | 2 | Outer conductor: GND (Shield) |

Table 4-4: ACU F connector, Rx and Tx, outline and pin assignment

For step-by-step guidelines how to set up the VSAT modem see *VSAT modem settings* on page C-1.

### 4.1.7 RS-232 and RS-422 connectors for VSAT modem

Use these connectors to connect the ACU to the VSAT modems with serial interfaces. See Appendix C, *VSAT modem settings*.

#### RS-232

| Outline (on the ACU) | Pin | Pin function |
|---|---|---|
| 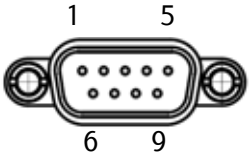 | 1 | Not connected |
| | 2 | RXD |
| | 3 | TXD |
| | 4 | DTR |
| | 5 | Ground |
| | 6 | DSR |
| | 7 | RTS |
| | 8 | CTS |
| | 9 | Receive Signal Strength Indicator |

Table 4-5: ACU RS-232 connector, male, outline and pin assignment

#### RS-422

| Outline (on the ACU) | Pin | Pin function |
|---|---|---|
| 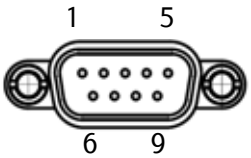 | 1 | Ground |
| | 2 | Line A RXD (+) |
| | 3 | Line B TXD (+) |
| | 4 | Ground |
| | 5 | Ground |
| | 6 | Not connected |
| | 7 | Line A RXD (-) |
| | 8 | Line B TXD (-) |
| | 9 | Not connected |

Table 4-6: ACU RS-422 connector, male, outline and pin assignment

### 4.1.8 LAN connectors

The LAN connectors on the ACU are used for system setup and for connection to the VSAT modem.

**Note** These connectors are normally only for communication within the VSAT system, not for connection to the Internet. For Internet connection, connect to your VSAT modem.

The maximum cable length per connection is 100 m. Depending on the VSAT modem connected, a LAN connector may be used for modem control.

**Important** The EXPLORER VSAT system is not designed to be connected directly to the Internet. It must be located behind a dedicated network security device such as a fire wall.

You should change the default passwords as anyone with access and malicious intent can render the VSAT system inoperable.

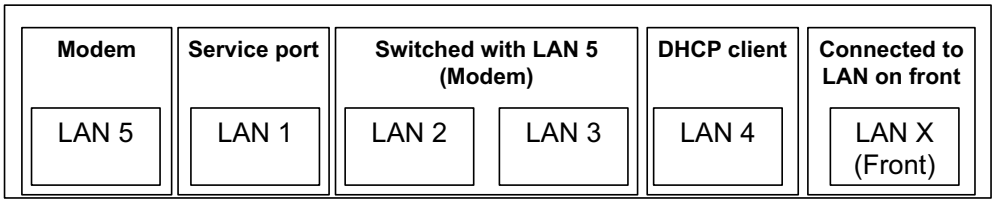


Figure 4-3: ACU LAN connectors on rear panel (default setup)

Cable type: CAT5, shielded.
For information how to configure the LAN network see *To configure the LAN network* on page 6-14.

| Outline | Pin | Pin function | Wire color |
|---|---|---|---|
| 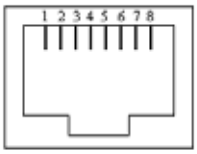 | 1 | Tx+ | White/orange |
| | 2 | Tx- | Orange |
| | 3 | Rx+ | White/green |
| | 4 | Not connected | Blue |
| | 5 | Not connected | White/blue |
| | 6 | Rx- | Green |
| | 7 | Not connected | White/brown |
| | 8 | Not connected | Brown |

Table 4-7: ACU LAN connectors, outline and pin assignment

## 4.1.9 User I/O

The User I/O connector is an 8-pin circular connector for user inputs and outputs, such as muting the antenna or signalling Rx lock.

A short cable with a mating connector is available from Cobham SATCOM (part number S-37-146760).

### Pinout and functions

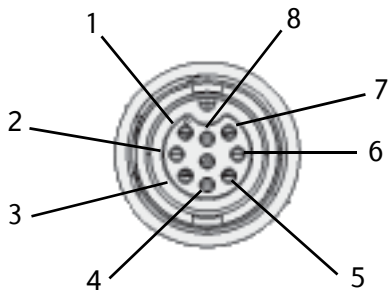


Figure 4-4: ACU User I/O connector, pinout

| Pin | Pin function | Direction | Type | Description | Wire color[a] |
|---|---|---|---|---|---|
| 1 | ACU Chassis | common | - | - | Black |
| 2 | RX Lock | output | 12 or 24 V logic | High when RX locked | Brown |
| 3 | Stow indicator switch | output | Switch in antenna | Connected to GND (closed) when antenna stowed, otherwise open | Orange |
| 4 | TX Mute | input | 3-32 V logic | Pull up to mute the antenna | Yellow |
| 5 | Stow input | input | 3-32 V logic | Float or pull up to force antenna to stow. Ground to allow standard control of deploy/stow[b] | Green |
| 6 | IF29 Aux1 | input | 3-32 V logic | Spare input | Blue |
| 7 | IF29 Aux2a | input or output | 3-32 V logic or open drain | Spare input/output | Violet |
| 8 | IF29 Aux2b | input or output | 3-32 V logic or open drain | Spare input/output | White |

Table 4-8: ACU User I/O connector, Pin assignment, functions and wire color

a. The wire colors apply to the corresponding I/O cable available from Cobham SATCOM.
b. The Stow input must be enabled in the web interface in order to work. See *Stow input* on page 6-19.

For specifications, see the next section.

## Electrical specifications

| Pin | Pin function | Input/Output | Parameter | Specification |
|---|---|---|---|---|
| 2 | RX Lock | Output | RXL H voltage | 12 or 24 V software selectable |
| | | | RXL L voltage | 0 V |
| | | | RXL H source current | 20 mA for a LED or a sensitive relay |
| | | | RXL L sink current | 0 mA |
| | | | Protection | ESD and overcurrent |
| 3 | Stow indicator switch | Output | Switch voltage, max. | 48 Vpeak |
| | | | Switch current, max. | 2 A (resistive load) |
| 4<br>5<br>6<br>7<br>8 | TX Mute<br>Stow input<br>IF29 Aux1<br>IF29 Aux2a[a]<br>IF29 Aux2b[a] | Input | Input H voltage | > 1.0 V input ref. to GND |
| | | | Input L voltage | < 0.4 V input ref. to GND |
| | | | Input H sink current | < 0.5 mA @ 3.3 V, < 5.0 mA @ 32 V |
| | | | Input L source current | < 0.5 mA |
| | | | Input allowed voltage range | 32 V ref. to GND |
| | | | Input Protection | ESD |
| 7<br>8 | IF29 Aux2a[a]<br>IF29 Aux2b[a] | Output | Output H voltage | 48 Vpeak, 15 KOhm internal pull up to 5.7 V |
| | | | On resistance | < 1 Ohm @ 200 mA |
| | | | Sink current | 450 mA max. continuous |
| | | | Switch time | < 8 µs |
| | | | Output protection | ESD<br>Overvoltage & overcurrent |

Table 4-9: ACU User I/O connector, electrical specifications

a. AUX2a and AUX2b can be either inputs or outputs. AUX2a and AUX2b must be the same (both inputs or both outputs).

# 4.2 Interfaces of the antenna

## 4.2.1 VSAT air interface

The antenna operates in the Ku-band (10.7 to 14.5 GHz) or the Ka-band (19.2 to 30 GHz). Service capabilities are determined by the connected VSAT modem.

## 4.2.2 GNSS air interface

The antenna has a GNSS receiver for positioning input from the Positioning system.

## 4.2.3 Earth magnetic field interface (electronic compass)

The EXPLORER 8000 series has an electronic compass to support the pointing process.

**Important** You must calibrate the compass after first installation and every time you have reinstalled it, see *Compass calibration* on page 6-19.

## 4.2.4 Connectors on the antenna

The connectors on the rear of the antenna are located as shown below:

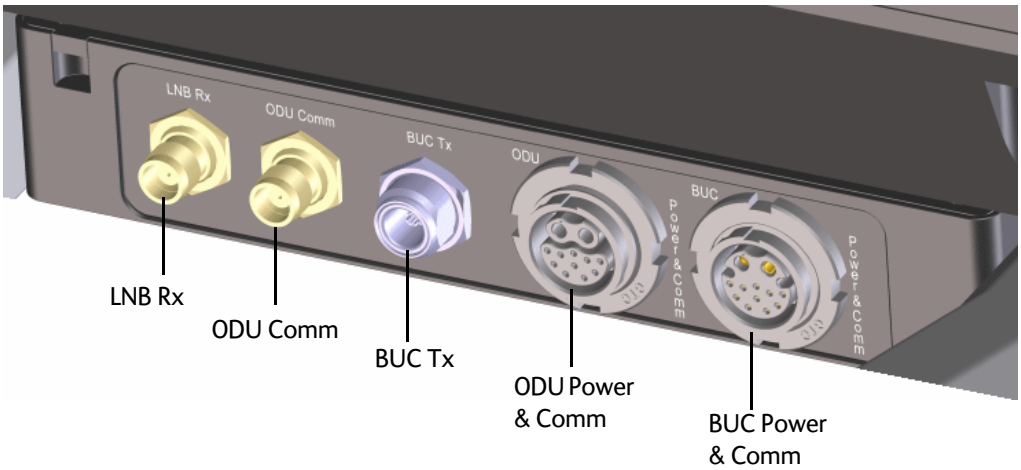


Figure 4-5: Connectors on the rear side of the antenna

A cable bundle with all necessary cables between antenna and ACU is delivered with the system. There are 5 connectors on the antenna for connection to the ACU:

- **LNB Rx**: SMA connector with signal from the LNB to the ACU and power to the LNB
- **ODU Comm**: SMA connector used for Housekeeping communication between the ACU and the antenna.
- **BUC Tx**: N-connector for signal and power from the ACU to the BUC (max. 432 W)
- **ODU Power & Comm**: Circular connector for antenna power (ODU power) and information of the antenna to the ACU. For pinout see *Connectors for antenna connection* on page 4-3.

- **BUC Power & Comm**: Circular connector for power supply to the BUC and for communication with the BUC. For pinout see *Connectors for antenna connection* on page 4-3

The connectors on the front of the antenna are partially hidden behind the reflector as shown.

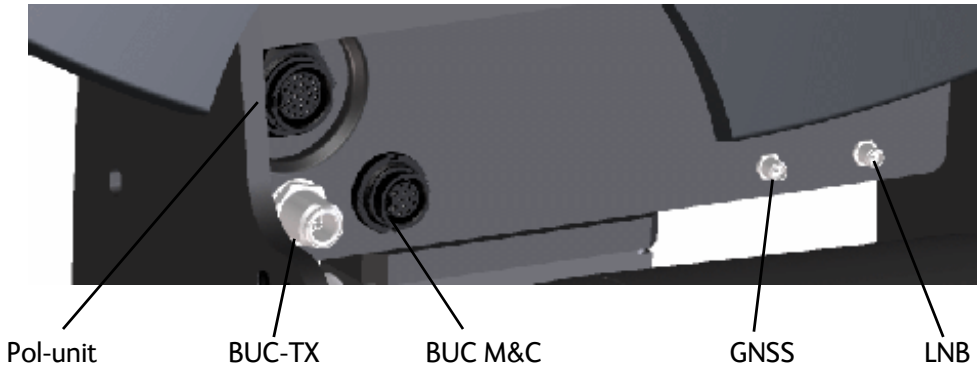


Figure 4-6: Connectors on the front of the antenna

- GNSS: Input from the GNSS receiver
- LNB: Input from the LNB
- BUC-TX: N-connector for signal and power from the antenna control box to the BUC.
- BUC M&C (Monitor & Control). Circular connector for communication between the antenna control box and the BUC.
  For pin assignments, see *BUC Power & Comm.: Circular connector.* on page 4-4

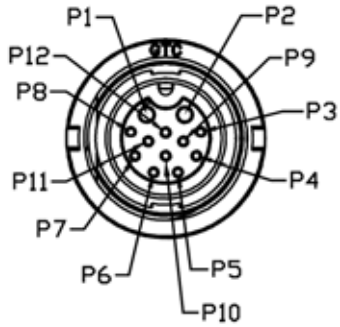


Figure 4-7: Antenna BUC M&C connector, pinout

- Pol-unit. Circular connector for connecting to the pol-unit.

### 4.2.5 Emergency stop button

The antenna has a emergency stop button for service purposes or emergency stop. In normal operation the switch is on. When you switch it off (push the button) it stops in the latest position and brakes the DC Motors and turns the BUC off.

**To stop the antenna, push in the red emergency stop button at the back of the antenna dish.**


Figure 4-8: Emergency stop button

**Important** If you want to manually stow the antenna, it is not enough to stop the antenna. For safety reasons you must remove power from the system before manually stowing the antenna. For details on how to manually stow the antenna, see *To stow and unfold the antenna manually* on page 7-10.

**To release the emergency stop, turn the emergency stop button and move away from the antenna.** The antenna restarts.

## 4.3 Interfaces of the VSAT modem

For interfaces of the VSAT modem and how to connect a VSAT modem correctly to the ACU, see the user documentation of the VSAT modem. For step-by-step guidelines how to set up the VSAT modem see Appendix C, *VSAT modem settings*.

# Initial setup and basic functions

This chapter describes the initial setup and basic functions of the EXPLORER 8000 series VSAT systems.

For information on configuration with the web interface and how to use the display and keypad, see *Setup and operation* on page 6-1.

This chapter has the following sections:

- *To drive with the antenna installed*
- *Prerequisites for installation*
- *Initial setup*
- *Start up and basic functions*

## 5.1 To drive with the antenna installed

The antenna must be stowed when you drive the vehicle. The maximum speed depends on your installation, but it must never exceed 130 km/h.

**WARNING!** Incorrect installation of the antenna may cause the antenna to fall off the vehicle or stress the mounting base. Thrane & Thrane A/S assumes no liability for any damage caused by the antenna falling off the vehicle or stressing the mounting base. It is the responsibility of the customer to ensure a safe and correct installation of the antenna. The instructions in the Installation manual are only guidelines.

## 5.2 Prerequisites for installation

### 5.2.1 Location for transmission

#### Line of sight

Make sure the vehicle with the VSAT system is parked where there is free view to as much of the sky as possible.

If possible, park the vehicle in such a way that the antenna, when deploying, points in the approximate direction of the satellite. T**his is to avoid excessive movements of the antenna and to improve the acquisition time**. If the satellite elevation is close to Zenith, the antenna elevation angle should preferably be less than 82 degrees.

#### Space for antenna movement

Make sure the vehicle is parked in a place where the antenna can move freely in all directions, according to the Stay clear areas shown in Figure 3 on page vi and Figure 4 on page vii.

If you cannot avoid obstacles, you must define a blocking zone to make sure the equipment is not damaged. See *Blocking zones* on page 6-11.

### Unexpected antenna movements

The movements of the antenna can be very powerful and hazardous to human beings. For this reason, the antenna has a safety feature that prevents or limits unexpected movements of the antenna, e.g. if the antenna has to repoint after a period with no movements. In this case, you can set up the antenna so that the user must actively choose to continue. If you need to avoid user interaction to allow the antenna to continue operation, you can set up the antenna for Unmanned operation. See *Antenna stabilization and safety* on page 6-10.

**WARNING!** Make sure nobody can get close to the antenna, especially if you use the unmanned operation feature! Observe the stay clear area whenever the antenna is powered. See the mechanical stay-clear areas on page vi and page vii.

### Avoid magnetizable material

Make sure the vehicle with the antenna is not parked close to large areas of magnetizable material, as this could interfere with the precision of the compass function.

## 5.2.2 Wind speed considerations

The antenna is designed to operate under high wind speeds, see the wind speed specifications on page A-3. Note that the antenna may point away from the satellite in winds blowing faster than the operational wind speed limit.

**Important** Do not operate the terminal at wind speeds exceeding the operational wind speeds. In case the wind speeds exceed the operational wind speed limit while the antenna is already assembled or operational, bring the antenna to the stow position. In case the wind speeds exceed the survival wind speed limit while the antenna is already assembled or operational, and you cannot stow the antenna with the electronic stow function, bring the antenna manually back to the stow position. See *To stow and unfold the antenna manually* on page 7-10.

# 5.3 Initial setup

After you have installed and connected the antenna, ACU and modem, you must make some initial configuration in the web interface before you can use the system. Go through the following steps to set up your VSAT system:

1. Ku-Band versions: If you have replaced cables or installed a new BUC, you must make a cable calibration. See *BUC installation* on page 7-14 and *Ku-Band version only: Cable calibration* on page 6-22.
2. Make a Compass calibration. See *Compass calibration* on page 6-19.

**Important** You must make a compass calibration every time the antenna is reinstalled. If the compass is not calibrated the system will not work properly!

3. Create satellite profiles and modem profiles. See *Satellite profiles* on page 6-7 and *Modem profiles* on page 6-6.
4. If you want to control the system using a WLAN connection, you must first set up the use of WLAN in the ACU. See *To configure the LAN network* on page 6-14 and *WLAN settings* on page 6-16.

After calibration and creation of satellite profiles and modem profiles you can deploy the antenna as described in the next section.

# 5.4 Start up and basic functions

**Important** First time after installation or service, you must calibrate the VSAT system and configure satellite and modem profiles as described in the previous section.

After power on you must deploy the antenna. How to do this is described in the following sections. Once you have finished the transmission you must stow the antenna again.

During commissioning you might need to manually jog the antenna, see *To line up or jog the antenna* on page 6-22.

**WARNING!** Stay clear of the antenna! Be aware of movements and pinch points, especially while the antenna is being positioned, deployed or stowed.

1. Switch on the ACU and the VSAT modem. The ACU starts up and goes through an initialization procedure.
2. Wait until the **Power** LED and the **Fail/Pass** LED on the ACU light steady green and the display shows **Not ready**: **Not deployed**. Then you can deploy the antenna.

To deploy and stow the antenna you can use the keypad and display on the ACU, a smartphone or tablet, or a PC and the built-in web interface.

You must stow the antenna before moving the vehicle.

## 5.4.1 To deploy the antenna

**Note** It may take some time after the antenna is deployed before the modem is ready to start the acquisition procedure. If this time exceeds the time-out limit, you may get a popup in the display and in the web interface asking you to Deploy again. This is for safety reasons, in order to avoid sudden unexpected movements of the antenna. See *Antenna stabilization and safety* on page 6-10.

### To deploy the antenna using the keypad and display

When the system has started up, do as follows:

1. **Shortcut**: Press and hold ▲ for 2 seconds.

   **Note** It may take up to 10 seconds before the antenna starts to deploy.

To learn how to use the keypad see *Keypad and display menus* on page 6-27.
You can also deploy the antenna using the display menu system.

2. Wait until the ACU display shows **TRACKING**.
   You may have to select **Deploy** again to allow the acquisition procedure, see note above.
3. Check that your modem is ready. The indications may differ depending on the modem type, refer to the documentation for your modem.

When the modem is ready, you can use it to connect to the Internet via the VSAT satellite system.

## To deploy the antenna using the mobile web interface

1. Connect your smartphone or tablet to the WLAN access point of the ACU. For information on WLAN setup, see *WLAN settings* on page 6-16.
2. In the browser of your smartphone or tablet, type in the IP address for the web interface. By default the IP address is http://192.168.0.1.
3. When the system has started up, tap **Deploy**.
4. Check the status on your smartphone/tablet. You may have to confirm before the acquisition procedure can start, if too much time has passed after the deployment of the antenna.
5. Check that your modem is ready. The indications may differ depending on the modem type, refer to the documentation for your modem.

When the modem is ready, you can use it to connect to the Internet via the VSAT satellite system.

## To deploy the antenna using the web interface

1. Connect a PC to the **LAN1** or front **LAN** connector at the ACU.
   You may also use WLAN, if it is configured.
2. Open an Internet browser and type the IP address (default http://192.168.0.1**).**
3. When the system has started up, click the **Deploy** button.

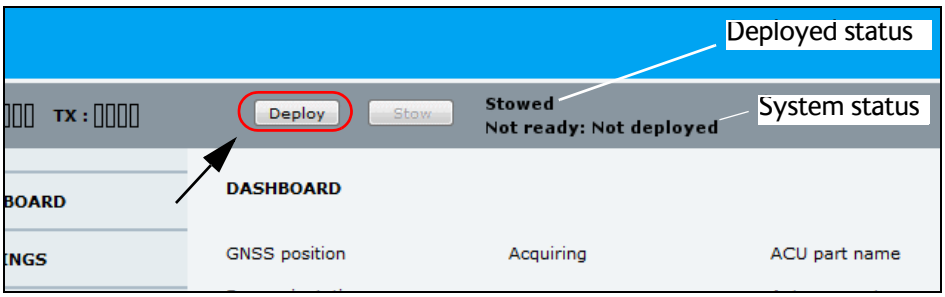


Figure 5-1: To deploy the antenna using the web interface

4. Check the status in the web interface. You may have to confirm before the acquisition procedure can start, if too much time has passed after the deployment of the antenna.
5. Wait until the system status shows **Tracking**.

6. Check that your modem is ready. The indications may differ depending on the modem type, refer to the documentation for your modem.

When the modem is ready, you can use it to connect to the Internet via the VSAT satellite system.

## 5.4.2 To stop the antenna

You can stop the antenna, e.g. if some object is interfering with the movement of the antenna and you cannot access the emergency stop button. If you are close to the ACU, you can use the on/off button to switch off the system. This will immediately stop the antenna movement.

You can also use the electronic stop function, which is described below.

**WARNING**! This is not the same function as the emergency stop button! In emergency situations, use the emergency stop button if possible. The emergency stop button switches off the motors, whereas the electronic stop function just stops the movement.

### To stop the antenna using the display and keypad

To learn how to use the keypad see *Keypad and display menus* on page 6-27.

1. Press **OK** to scroll to the **OPERATION** page and press **OK** again to access the page.
2. Press ▼ until **STOP** is selected, and press **OK**.
3. Check that the status shows **STOPPED**.
4. To start the antenna again, select **OPERATION > START.**
   The antenna restarts. Select **OPERATION > DEPLOY** when you are ready to continue.

### To stop the antenna using the mobile web interface

1. Connect your smartphone or tablet to the WLAN access point of the ACU. For information on WLAN setup, see *WLAN settings* on page 6-16.
2. In the browser of your smartphone or tablet, type in the IP address for the web interface. By default the IP address is http://192.168.0.1.
3. Tap **Stop**.
   The **Stop** button changes to **Start**.
4. To start the antenna again, tap **Start**.
   The antenna restarts. Tap **Deploy** when you are ready to continue.

### To stop the antenna using the web interface

1. Connect a PC to the **LAN1** or front **LAN** connector at the ACU.
   You may also use WLAN, if it is configured.
2. Open an Internet browser and type the IP address (default http://192.168.0.1**).**

3. At the top, click the red **Stop** button.


Figure 5-2: To stop the antenna using the web interface

The **Stop** button changes to **Start** and the system status shows **Stopped**.

4. To start the antenna again, click **Start**.
   The antenna restarts. Select **Deploy** when you are ready to continue.

## 5.4.3 To stow the antenna

The antenna must be set into the stow position before moving the vehicle.

**WARNING!** Be aware of pinch points while the antenna is being positioned, deployed or stowed.

**Note** You can stow the antenna manually, if for some reason the system is inoperable (loss of power or similar). For details, see *To stow and unfold the antenna manually* on page 7-10.

### To stow the antenna using the keypad and display

**Shortcut**: Press and hold ▼ for 2 seconds.

To learn how to use the keypad see *Keypad and display menus* on page 6-27.

To stow the antenna using the display menu system, do as follows:

1. Press **OK** to scroll to the **OPERATION** page and press **OK** again to access the page.
2. Press ▼ until **STOW** is selected, and press **OK**.
3. Check that the status shows **STOWED**.

### To stow the antenna using mobile web interface

1. Connect your smartphone or tablet to the WLAN access point of the ACU. For information on WLAN setup, see *WLAN settings* on page 6-16.
2. In the browser of your smartphone or tablet, type in the IP address for the web interface. By default the IP address is http://192.168.0.1.
3. Tap **Stow**.
4. Check that the status shows **Stowed**.

## To stow the antenna using the configuration web interface

1. Connect a PC to the LAN1 connector.
2. Open an Internet browser and type the default IP address: **http://192.168.0.1.**
3. At the top of the page, click the button **Stow**.

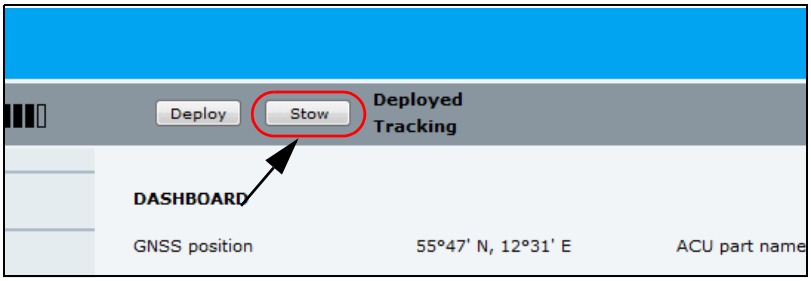


Figure 5-3: To stow the antenna using the web interface

4. Check that the status shows **Stowed**.

# Setup and operation

This chapter has the following sections:

- *The web interface*
- *Keypad and display menus*
- *SNMP support*

## 6.1 The web interface

The VSAT system has a built-in web interface, which has two levels:

- **Mobile web interface**, used for basic operations and status. Accessed from a smartphone or tablet.
- **Configuration web interface**, used for configuration, line-up, troubleshooting, extended status information etc. Accessed from a computer.

### 6.1.1 Mobile web interface

When you access the web interface from a smartphone or tablet you get access to the mobile web interface, which offers the following basic operations and status:

- Deploy, stow and stop the antenna
- Activate satellite profile
- See status and events
- Access the configuration web interface

#### To access the mobile web interface of the ACU

1. Power up the VSAT system, i.e. switch on the ACU. Wait until the LEDs on the front plate of the ACU show that the system is ready to be accessed.
   - Power LED: Green
   - Fail/Pass LED: Steady green.
2. Connect your smartphone or tablet to the WLAN of the ACU. For details on WLAN setup, see *WLAN settings* on page 6-16.
3. Open your Internet browser and enter the IP address of the ACU. The default IP address is **http://192.168.0.1**.

The mobile web interface opens.

The deploy, stow and stop functions are described in *Start up and basic functions* on page 5-3.


Figure 6-1: Mobile web interface, main screen

To access the menu, tap the ikon in the top right corner.

Menu:

- **Status** shows information such as system status, host name, position, heading, selected satellite profile, modem etc.
- **Satellites** lets you select which satellite to activate, see the next section.
- **Eventlist** shows a list of currently active events (if any).
- **Desktop** gives access to the “computer web interface”, i.e. the full version of the web interface.
- **Help** opens the user & installation manual for the EXPLORER 8000 series VSAT system.

## To select and activate a satellite profile

1. From the menu, select **Satellites**.
2. Select the satellite profile you want to activate.
3. Tap **Activate.**

## 6.1.2 Configuration web interface

Use the built-in web interface of the ACU to make a full configuration of the VSAT system with the correct VSAT modem, the satellite positions you intend to use and other parameters. You can use a standard Internet browser.

### To access the configuration web interface

To access the web interface of the ACU do as follows:

1. Power up the VSAT system, i.e. switch on the ACU. Wait until the LEDs on the front plate of the ACU show that the system is ready to be accessed.
   - Power LED: Green
   - Fail/Pass LED: Steady green.
2. Connect a PC to LAN interface 1 (Service port, standard Ethernet) of the ACU or to the front LAN connector of the ACU. You can also connect to the WLAN interface if configured.
3. Open your Internet browser and enter the IP address of the ACU. The default IP address is **http://192.168.0.1**.
4. By default, the web interface shows the **DASHBOARD** page. However, you can set up a password protection, so that you have to log in before you can get access to the web interface. See *User permissions (guest login)* on page 6-24.

When the Dashboard (or the Guest login page) is displayed, you know that the connection to the VSAT system can be established. The web interface is ready for use. You can continue to configure the system.

If you cannot establish a connection there might be problems with the Proxy server settings of your PC ("Use proxy server" must be disabled in your PC).

If you want to use another LAN port you must configure it according to your network requirements. For information how to configure the LAN connectors *To configure the LAN network* on page 6-14.

### Information and controls in the top bar of the web interface

The top bar, which is independent of the selected page, shows the signal strength, the deployed status, the system status, and, if an event is active, a warning icon.

The buttons **Deploy**, **Stow** and **Stop** are also available from the top bar. For details on these functions, see *Start up and basic functions* on page 5-3.

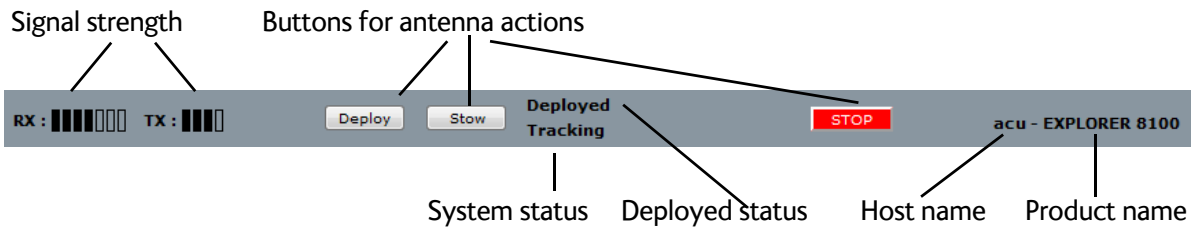


Figure 6-2: Top bar in Dashboard

Examples of system status:

- Antenna SW upload
- Antenna POST (Power-On Self Test)
- Ready (waiting for data from the modem or no satellite profile selected)
- Tracking (antenna is locked to the satellite signal and ready to send/receive.
- Not ready: Not deployed (the system is waiting for the user to deploy the antenna)
- Safe mode (error, followed by an error description)
- <active event message>

## Information fields on the Dashboard

**Note** The information on the Dashboard varies depending on the antenna and the used satellite and modem profiles.

| DASHBOARD | Description |
|---|---|
| Position | Current position, reported by the GNSS module or entered manually |
| Base orientation | Orientation of the mounting base relative to estimated North |
| Satellite profile | Name of the currently active satellite profile |
| Satellite position | Position of the satellite selected in Satellite profile |
| RX polarization | Horizontal, Vertical, Left-hand or Right-hand |
| TX polarization | Horizontal, Vertical, Left-hand or Right-hand |
| RX RF frequency | Receiving frequency |
| LNB LO frequency | The LNB Local Oscillator frequency |
| TX RF frequency | Transmitting frequency |
| BUC LO frequency | The BUC Local Oscillator frequency |
| Tracking RF frequency | Current RF tracking frequency |
| ACU part name, Antenna part name, ACU serial number, Antenna serial number, Software version | Part names, serial numbers for ACU and antenna, software version of the VSAT system |
| POINTING | Description |
| Azimuth, elevation geo | Current value for geographic azimuth and elevation |
| Azimuth, elevation rel | Current value for relative azimuth and elevation |
| Polarization skew | Current value for polarization skew |

Table 6-1: DASHBOARD information fields

| MODEM | Description |
|---|---|
| Model | VSAT modem name, entered in SETTINGS > Modem profiles. |
| RX locked status | Shows whether or not the system has locked to the incoming signal. |
| Signal level | Current input signal level from VSAT modem.<br>iDirect openAMIP modem: (PWR) 0-500, delivered by the connected modem. For values <250 the antenna searches after a new signal.<br>Other modem: Signal level in dB. |
| RX IF frequency | RX IF frequency read from the VSAT modem |
| TX IF frequency | TX IF frequency read from the VSAT modem |
| TX allowed | On or Off. Indicates if the VSAT modem supplies the 10 MHz reference signal on its TX connector (On) and if an iDirect OpenAMIP modem indicates modem Locked and Tx ON in the OpenAMIP message L (L 1 1). |
| TX mute | Muted or Not muted. Indicates whether or not the antenna is muted. You can mute the antenna using the TX mute input on the User I/O connector. See *User I/O* on page 4-7. |
| **TX** | **Description** |
| BUC TX | On or Off. Shows if the VSAT system has enabled the BUC or not. It is the same TX ON/TX OFF as shown in the display of the ACU, see *Keypad and display menus* on page 6-27. |
| BUC output power | Shows whether or not the BUC is transmitting and the power level. At the P1dB compression point 4 bars are filled. |

Table 6-1: DASHBOARD information fields

## 6.1.3 Modem profiles

A modem profile contains all VSAT modem settings that are necessary for a successful connection to the satellite. The data you have to fill in are provided by your VSAT service and modem provider. You must add at least one modem profile.

### Modem profile – New entry and Edit

On the page **Modem profiles** you create, edit or delete modem profiles.

To add or edit a modem profile, do as follows:

1. Select **SETTINGS > Modem profiles** and click **New entry** or **Edit**.

   **Note** For the Ka-Band system there is currently only one modem, the Surfbeam II modem.

2. Fill in a modem profile name of your own choice.
3. Select one of the supported modems from the drop down list. Once you have selected a VSAT modem, entry fields required for this VSAT modem are displayed.
   **Generic OpenAMIP**: If you have an OpenAMIP modem that is not included in the list, select Generic OpenAMIP.
   **Generic modem**: If you have another modem that is not included in the list, select the generic modem. With this modem profile you enter all information about the modem manually.
   **Service modem**: This is mainly used for reference satellites[1] and for troubleshooting purposes.
4. Fill in or edit the data provided by your VSAT service provider.
   - Enter the passwords, if needed.
   - Select the modem baud rate
   - Select whether you want to use the 10 MHz reference from the ACU (Internal) or the VSAT modem (VMU). “Cleaned” means that any noise on the 10 MHz reference signal is removed before using the reference.

     **Important** The VSAT system can work either using the Rx or Tx 10 MHz reference signals provided by the modem or using its own built-in 10 MHz reference (RX only). **The setting in the ACU must match the setting in the modem**.

   - **GNSS output**: Some modems need the current GNSS position from the ACU. If the modem needs the GNSS position, you must select the baud rate for the RS-232 interface from the **GNSS output** dropdown list. Otherwise select Disabled.
   - For generic modem: Select the RSSI Lock Type and type in the RSSI Lock Level.
   - **For OpenAMIP IP address**: Make sure that you have entered this IP address also for the LAN connector that is used for the OpenAMIP modem, see *To configure the LAN network* on page 6-14.
5. Click **Apply** to add the new profile to the list of modem profiles or to accept the edits.

---

1. For details on how to use a reference satellite profile, see *To use a reference satellite (Ku only)* on page 6-9.

## 6.1.4 Satellite profiles

On the page **Satellite profiles** you add, edit, delete and activate satellite profiles. A satellite profile contains all settings that are necessary for a successful connection to the satellite, including a modem profile. Most of the data you have to fill in are provided by your VSAT service provider.

**You must activate one satellite profile**.

To activate a satellite profile, click **Activate** next to the profile name.

**Note** You must add at least one modem profile before you can add a satellite profile. See *Modem profile – New entry and Edit* on page 6-6.

### To select a reference satellite (Ku only)

If you are going to use a reference satellite, select the satellite from the dropdown list and click **Apply**.

**Note** First you have to create a reference satellite profile.[1]

### Satellite profiles – New entry and Edit

**Note** You cannot edit nor delete an active profile. Make sure the profile is not active before you edit or delete it.

1. Select **SETTINGS** or **Satellite profiles**.
2. Click **Edit** or **New entry**.
   Each satellite profile has one assigned modem profile. The parameters vary depending on the selected modem profile.
   For a Generic modem you enter all parameters in the satellite profile manually.
3. Enter or edit the Satellite profile name.

   **Note** It is helpful to assign a name containing the location where the Satellite profile is to be used (e.g. *Central America*) and possibly the provider.
4. Select a modem profile. The page automatically displays the parameters available for the selected modem profile.
   For instruction how to add a modem profile see *Modem profile – New entry and Edit* on page 6-6.
5. Enter the data for the satellite that you want to use. For satellite data see *DVB-S/DVB-S2 satellites for Ku-Band* on page F-1 or www.lyngsat.com. If you have selected a satellite from the list, some of the information is filled in automatically.
6. Click **Apply** to save the settings for the satellite profile.

Depending on the selected modem profile, some or all of the below settings may be available. You get most of the information from your VSAT provider.

| Setting | Values | Explanation |
|---|---|---|
| Predefined satellites | User defined data or selection of satellites | Select a satellite from the list, or select **User defined data** and enter all information manually. |
| Use reference satellite | Checkbox | Select **Use reference satellite** if you are going to use a reference satellite. See *To use a reference satellite (Ku only)* on page 6-9. |
| Satellite position | degrees E or W | Position of the satellite |
| Polarisation skew | degrees | See documents from VSAT provider |
| Maximum inclination | degrees | Sets the satellite search window size to match inclined orbit satellites. |
| Elevation cutoffl | degrees | The minimum elevation angle for the antenna to function. According to FCC (FCC §25.205) regulations the Elevation cutoff must be minimum **5 degrees**. |
| RX polarisation | Horizontal or vertical | Polarization of the desired RX signal |
| TX polarisation | X-pol or empty | Polarization of the TX signal - relative to the desired RX signal. Orthogonal (X-pol) or same (Co-pol). |
| RX IF frequency | MHz | RX IF frequency from the VSAT modem |
| LNB LO frequency | 9.75 or 10.75 GHz | Select **9.75** if the RX frequency is between 10.7 GHz and11.7 GHZ<br>Select **10.75** if the RX frequency is between 11.7 GHz and 12.75 GHZ |
| RX RF frequency | GHz | Receiving frequency |
| TX RF frequency | GHz | Transmitting frequency |
| Tracking type | Narrow band, VSAT modem RSSI, DVB-S/DVB-S2 or Wideband power | Select which signal should be used for tracking. |
| RX frequency | Modem or User defined | Select **Modem** to use the modem RX frequency or select **User defined** and enter the RX frequency manually. |

Table 6-2: Settings for satellite profile

## To use a reference satellite (Ku only)

If your VSAT modem cannot communicate to the antenna that it is locked to the correct satellite, you can initially use a reference satellite that the antenna can identify without the modem.

To use a reference satellite, do as follows:

1. On the Modem profiles page, create and save a modem profile using the Service modem. For details, see *Modem profile – New entry and Edit* on page 6-6.
2. On the Satellite profiles page, create and save a reference satellite profile that uses the Service modem profile. For details, see *Satellite profiles – New entry and Edit* on page 6-7.
3. Create your real satellite profile for the connected modem.
4. In the real satellite profile, select **Use reference satellite**.
5. In the **Satellite profiles** page under **Reference satellites**, select the reference satellite profile from step 2 above and click **Apply**.


Figure 6-3: Web interface: SETTINGS - select reference satellite

6. Activate the real satellite profile.

With this satellite profile activated, every time you deploy the antenna it will start up using the reference satellite and automatically switch to the real satellite when possible.

### 6.1.5 Antenna stabilization and safety

The antenna movements of the VSAT system can be hazardous to people who are close to the antenna. Always stay out of the **Stay clear area** shown in page vi and page vii. If you have to enter the stay clear area, stop the antenna with the emergency stop button or power off the system from the ACU.

In the web interface you can set up whether or not you want the system to ask for user acknowledgement before moving the antenna.

The antenna also has a stabilization feature that compensates for movements in the vehicle e.g. if people are getting in our out of the vehicle while it is deployed and active.

1. Select **SETTINGS > Antenna**.
2. Select the **Operational mode**.
   - **User acknowledgement** (Default setting): The user interface will ask for acknowledgement when the antenna is about to move after at least one minute without moving. The antenna will not move until someone has acknowledged.
   - **No user acknowledgement**: The antenna will move autonomously when necessary, e.g. if there is a new satellite position from the modem.
   - **Unattended**: The antenna will move autonomously when necessary, and attempt to maintain the connection at all times, independently of the user. For example, if the antenna enters safe mode because of an error, it will restart.
3. Select **Auto stow on vehicle movement** if you want the antenna to stow automatically when the vehicle moves. This setting is disabled by default.
4. Select the **Stabilization mode**.
   - **Continuous** (Default setting): The antenna continuously compensates for movements in the vehicle to keep a stable position in relation to the satellite.
   - **Off**: Antenna stabilization is not used
   - **Automatic**: The antenna periodically adjusts the position to compensate for movements in the vehicle.
5. Click **Apply**.

## 6.1.6 Blocking zones

If possible, avoid any objects within the stay clear area shown in *Mechanical "stay-clear" area, EXPLORER 8100* on page vi. If it cannot be avoided, you must enter blocking zones for the area where the object is located. When the antenna meets a blocking zone, the display and the web interface show "Blocking zone" and the antenna attempts to find another path to the satellite signal.

**Note** The antenna should be placed on a plane surface relative to the ground, in order for the elevation values to be precise during the Jog process.

There are two types of blocking zone:

- Boom blocking zone: Prevents the boom from colliding with the blocking object.
- Dish blocking zone: Prevents the dish from colliding with the blocking object.

For both types, you must define an azimuth low limit and an azimuth high limit. A boom blocking zone additionally needs a high elevation limit to be defined (the low elevation limit will be set to 0). A dish blocking zone, on the other hand, additionally needs a low elevation limit to be defined (the high elevation limit will be set to 100 degrees).

The blocking zone limits are found as follows:

1. Switch on the system and access the web interface. See *To access the configuration web interface* on page 6-3.
2. Deploy the antenna and switch to Jog mode as soon as possible. See *To line up or jog the antenna* on page 6-22.
3. **For EXPLORER 8100 only**: Jog Polarisation to 0 deg (so that the waveguide reaches down as far as possible).
4. First define the boom blocking zones as follows (see Figure 6-4)

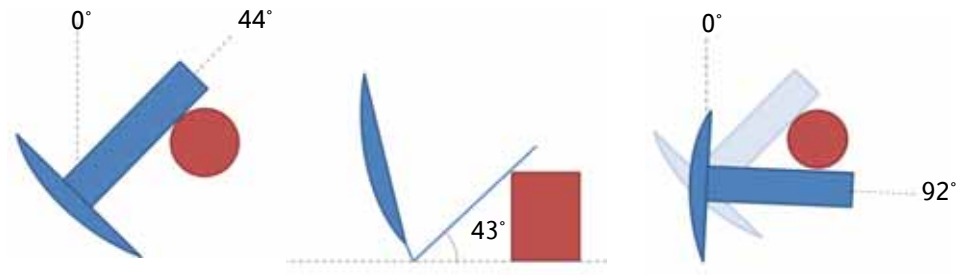


a. Azimuth low limit (view from above)

b. Elevation high limit (view from the side)

c. Azimuth high limit (view from above)

Figure 6-4: Boom blocking zones, example with cylinder-shaped blocking object

a. **Boom blocking zone, azimuth low limit**: Carefully jog the antenna clockwise (increasing Azimuth) until the boom is as close as possible to the blocking object, and so that the antenna can move freely in Elevation without touching the object.

Go to **SETTINGS > Blocking zones**, select **Boom** and read the "Current azimuth" at the top - this is the low azimuth limit of the boom blocking zone. Type it in as the first Azimuth value and click **Apply** (but **not** Active).

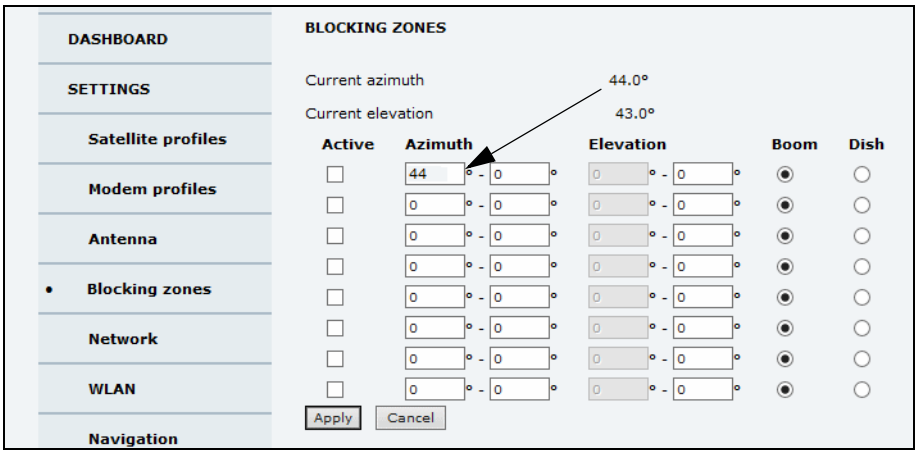


Figure 6-5: Web interface, Boom blocking zones

Go back to the **Jog** page.

b. **Boom blocking zone, elevation high limit**: Jog to the lowest elevation angle that allows the antenna to move all the way past the object in Azimuth. Go to the **Blocking zones** page and read the "Current elevation" - this is the high elevation limit of the boom blocking zone. Type it in under **Elevation** and click **Apply**. If the antenna is completely blocked, use 100 deg when you type in the blocking zones. Go back to the **Jog** page.

**Note** The elevation set in the Blocking zones page is the elevation of the signal beam. Some parts on the antenna may be below the elevation angle (e.g. the Forward Wave Guide), so you should add a little margin to keep all antenna parts clear of the object(s).

c. **Boom blocking zone, azimuth high limit**: Jog the antenna counterclockwise (decreasing azimuth) as close as possible to the blocking object, and so that the antenna can move freely in Elevation without touching the object. Go to the **Blocking zones** page and read the "Current azimuth" - this is the high azimuth limit of the boom blocking zone. Type it in and click **Apply**. Go back to the **Jog** page.

5. Jog the antenna at least 5 degrees away from any blocking zone.
6. Define the dish blocking zones as follows: (see Figure 6-6)

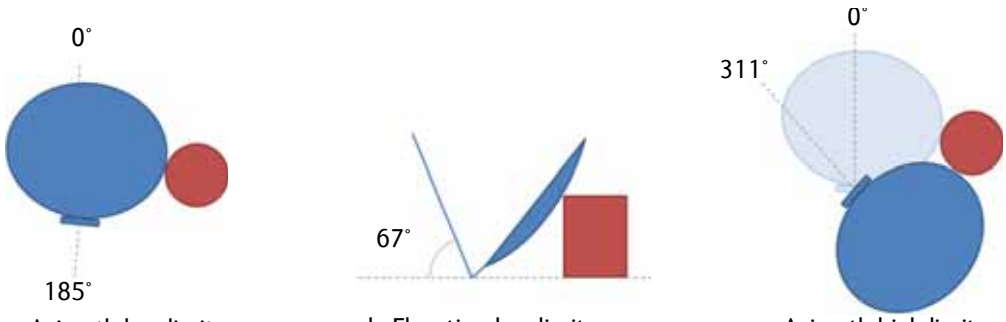


a. Azimuth low limit (view from above)

b. Elevation low limit (view from the side)

c. Azimuth high limit (view from above)

Figure 6-6: Dish blocking zones, example with cylinder-shaped blocking object

a. **Dish blocking zone, azimuth low limit**: Carefully jog the antenna clockwise until the dish is as close as possible to the blocking object, and so that the antenna can move freely in Elevation without touching the object.
Go to the **Blocking zones** page, select **Dish** at the next free line and read the “Current azimuth” - this is the low azimuth limit of the dish blocking zone. Type in the low azimuth limit and click **Apply** (but **not** Active).

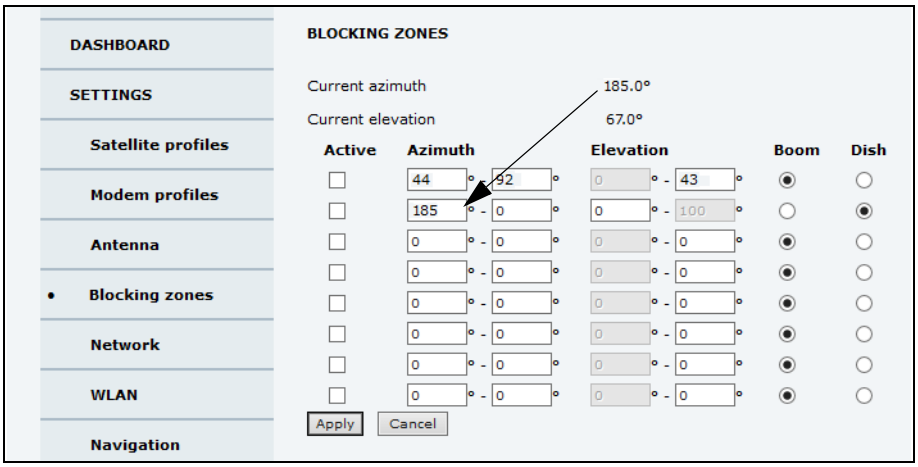


Figure 6-7: Web interface, Boom blocking zones

b. **Dish blocking zone, elevation low limit**: Jog to the highest elevation angle that allows the antenna (dish) to move all the way past the object in Azimuth. Go to the **Blocking zones** page and read the “Current elevation” - this is the low elevation limit of the dish blocking zone. Type it in under **Elevation** and click **Apply.** If the antenna is completely blocked, use 0 degrees when you type in the blocking zones.
c. **Dish blocking zone, azimuth high limit**: Jog the antenna counterclockwise as close as possible to the blocking object, and so that the antenna can move freely in Elevation without touching the object. Go to the **Blocking zones** page and read the “Current azimuth” - this is the high azimuth limit of the dish blocking zone. Type it in and click **Apply**.

7. If there are more blocking objects, repeat the procedure above for each blocking object.
8. Select **Activate** for each blocking zone and click **Apply**.

After defining and activating the blocking zones you can test it using the Jog function. Jog the antenna carefully until it meets the defined blocking zone. Observe that it stops at the blocking zone and that the display and the web interface show a warning.

## 6.1.7 To configure the LAN network

On this page you can set up the LAN network and enter a host name. The host name helps identifying the VSAT system.

**Important** The VSAT system is not designed to be connected directly to the Internet. It must be located behind a dedicated network security device such as a fire wall. You should change the default passwords as anyone with access and malicious intent can render the system inoperable.

To configure the LAN network, do as follows:

1. Select **SETTINGS > Network.**
2. Make the necessary changes on this page and click **Apply**.
   For available options for the network configuration, see Table 6-3 on page 6-15.


Figure 6-8: Web interface: SETTINGS, Network (default settings)

**Important** Make sure that the networks do not use IP address ranges that overlap.

| Sections | Preferred use |
|---|---|
| NETWORK Host name | The host name is used for identifying the VSAT system, and is displayed in the web interface (right side of top line, next to the product name). The default host name is acu. You can change the name. Letters (a-z), digits (0-9) and hyphen (-) are allowed as legal characters.<br>Note: The host name must start with a letter. |
| LAN Port 1 | LAN port 1 is the service port and is used to access the web interface. By default this port has the static IP address http://192.168.0.1; the current value can be shown in the ACU display (NETWORK > PORT 1 IP).<br>If you want a different setup for LAN port 1, you can change the IP settings. You get the default settings back by resetting to factory default. |
| LAN Port 2, 3 and 5 | By default, LAN port 5 is dedicated to the modem connection. If you want a different setup for LAN port 5, you can change the IP settings.<br>LAN 3 and 5 are switched with LAN 2, i.e. they are always on the same network and have the same IP settings as LAN 5. |
| LAN Port 4 | LAN port 4 is configured to be a DHCP client. You can change the IP settings according to your needs. |
| WLAN | The wireless port can be connected to one of the other ports.<br>Set here which of the ports 1 to 5 you want to access with WLAN. If you want to access the web interface with WLAN, select the service port (LAN 1 by default).<br>For details on the WLAN interface setup, see *WLAN settings* on page 6-16. |

Table 6-3: Setup of LAN network

## Static IP or DHCP Client

**Important** The DHCP server is enabled by default.

If you select **DHCP client** the network IP address and sub-net mask must be provided by a DHCP server on that network. If you select **Static** you must specify a unique IP address and a sub-net mask.

## DHCP Server Settings

When **Mode** is set to **Static**, you can select to let the LAN port act as a **DHCP server**.

The DHCP start and end addresses must be on the same subnet as the port's static IP.

## DNS setup

If you have access to a Domain Name Server (DNS) you can specify the address of the email server by using the server name instead of its IP address. This can be used in Outgoing mail server in *Email setup* on page 6-17.

You may statically specify the address of one or two DNS servers. Select the DNS source as static and fill in IP address or addresses.

Alternatively, if your DHCP server can provide a DNS address and you have selected DHCP client above, then select the same LAN as your DNS source.

### Gateway setup

If the ACU needs to communicate with network units outside the specified sub-nets, you must specify a default gateway (typically a router).

The default gateway can be set as a static IP address. Then set the default gateway source to static and enter the IP address of the default gateway. To remove the default gateway set it to 0.0.0.0.

Alternatively, if your DHCP server is able to provide a default gateway address and you have selected DHCP client above, then select the same LAN as your default gateway source.

## 6.1.8 WLAN settings

On the **WLAN** page you can enable and set up the WLAN access point. Do as follows:

1. First, on the **SETTINGS > NETWORK** page, link the WLAN interface to one of the LAN interfaces. Typically, you link WLAN to LAN 1, which is used to access the web interface of the VSAT system. See *To configure the LAN network* on page 6-14.
2. Select **SETTINGS > WLAN** from the left navigation pane.
3. Enable or disable the WLAN (default: **Disabled**).
4. Select the **Country** for your present location.
5. **WLAN channel** can be changed, channels available depend on the setting for **Country**.
6. For **Broadcast SSID,** select **Enabled** (default) or **Disabled.**
   **Enabled**: WLAN access point is shown to other users.
   **Disabled**: WLAN access point is hidden.
7. Type in the **SSID** of your choice or accept the default SSID, which is **Cobham**. The SSID is the name of the wireless local area network. It is a text with maximum 32 characters.
8. Select the **Security** standard. Select one of the following encryption standards:
   - **Disabled** (default)
   - **WEP-64**, enter the encryption key in hexadecimal format.
   - **WEP-128**, enter the encryption key in hexadecimal format.
   - **WPA-PSK**, enter the encryption key in hexadecimal or text format.
   - **WPA2-PSK**, enter the encryption key in hexadecimal or text format.
9. Type in the **Encryption key** for the selected Security standard. This is not applicable if you have selected **Disabled**.
10. Click **Apply**.

### 6.1.9 Navigation

On this page you can enter a fixed position or a fixed base heading. Do as follows:

1. Select **SETTINGS > Navigation** from the left navigation pane.
2. Set the **Heading (Compass direction)** and **Position**.

| Item | Description |
|---|---|
| **Heading (Compass direction)** | **Automatic** - magnetic heading is used (default setting).<br>**Manual** - enter a value for the direction of the antenna as an alternative to the magnetic heading (0 to 360 degrees, precision ±20˚. 0 degrees is North). |
| **Position** | **GNSS** - GNSS module is used for current position (default setting).<br>**Manual -** enter values from other position source. (Accuracy should be better than 50 m.) |

Table 6-4: Web interface: SERVICE > Navigation

3. Click **Apply** for each of the new settings.

### 6.1.10 Email setup

To be able to send diagnostics reports and other system information using e-mail you must set up a couple of parameters. Contact your IT department for the specific data.

To configure the e-mail setup, do as follows:

1. Select **SETTINGS > E-mail setup** from the left navigation pane.
2. Enter the data for Outgoing mail server (SMTP), SMTP port number, SMTP authentication, User name and password. This data is typically provided by your IT department.

**Note** You must set **Outgoing mail server** to an IP address if DNS has not been set up in **DNS setup** in *To configure the LAN network* on page 6-14.

### 6.1.11 Reports, syslog and SNMP traps

You can set up the system to send the following reports and messages:

- Diagnostics report
- Remote syslog
- SNMP traps

#### To send a diagnostics report

You can send automatically generated diagnostic reports at fixed intervals. The diagnostic report contains information relevant for the service personnel during troubleshooting. To set up sending a diagnostics report, do as follows:

**Note** You must first set up the Email. See the previous section, *Email setup*.

1. Select **SETTINGS > Reporting** from the left navigation pane.

   **Important** Note that the diagnostics report also shows the WLAN key.

2. Under Diagnostics report, enter the following:
   - E-mail sender
   - E-mail recipients (comma separated)
   - Send interval: Select **e-mail disabled** (default), **day** with 2-minute samples, **week** with hourly samples or **month** with hourly samples. The report contains statistics data for the selected intervals.
3. Click **Apply**.

You can also send the report at any time by clicking **Send now**. Use **Send now** to validate the e-mail setup. See also *Help desk and diagnostics report* on page 7-2.

#### Remote syslog

You can set up the antenna to send each syslog message to a syslog server to advise the system administrator of the current status of the antenna.

To set up sending syslog messages to a syslog server, do as follows:

1. Select **SETTINGS > Reporting**.
2. In the section **Remote syslog** select **On** to enable remote syslog (default: Off).
3. Enter the IP address of the syslog server to which the syslog messages will be sent.
4. Click **Apply**.

#### SNMP traps

SNMP traps, or notifications, are network packets which advise the system administrator about significant events in the antenna, e.g. alarms and system error messages. They are generated by the antenna and can be sent automatically to an SNMP trap receiver/manager).

To set up reporting SNMP traps to an SNMP server, do as follows:

1. Select **SETTINGS > Reporting**.
2. In the section **SNMP traps** select **On** to enable sending of SNMP traps (default: Off).
3. Enter the IP address of the SNMP trap receiver/manager to which the SNMP traps will be sent.
4. Enter the Community name. This is the name of the SNMP trap receiver/manager. This is needed for authentication of the SNMP trap request.
5. Click **Apply**.

### 6.1.12 Stow input

You can use pin 5 on the I/O connector on the ACU to force the antenna to stow. E.g. if you connect pin 5 to the ignition and enable the stow input in the web interface, the antenna will automatically stow when you start the vehicle. Do as follows:

1. Connect pin 1 in the I/O connector to GND in your connected equipment, e.g. the ignition system of your vehicle.
2. Connect pin 5 in the User I/O connector to "high" when the antenna should be forced to stow, e.g. when the ignition in the vehicle is switched on.
   For specifications for the User I/O interface, see *Electrical specifications* on page 4-8.
3. Connect pin 5 in the User I/O connector to GND when the normal stow functions should apply, e.g. when the ignition is off.
4. In the web interface, select **SETTINGS > Discrete I/O**.
5. Under **Stow input**, select **Enable.**
6. Click **Apply**.

The antenna will now automatically stow when voltage is applied to pin 5 in the User I/O connector. When pin 5 is connected to GND, the normal stow functions apply.

### 6.1.13 Compass calibration

**Important** You must make a compass calibration after first installation and **every time the antenna is reinstalled**. If the compass is not calibrated the system will not work properly!

**Note** You can set up whether or not you need administrator password to access calibration. See *User permissions (guest login)* on page 6-24.

With the system installed in the vehicle, park the vehicle and make a compass calibration in 4 directions with approximately 90 degrees between them.

Do as follows:

1. Make sure the antenna is stowed before calibration.

2. Locate a flat area for parking the vehicle. Make sure there are no large magnetizable objects (e.g. containers or trucks) close to the parking spot - it could affect the precision of the system.
3. Find fix points for parking the vehicle in four directions with approximately 90 degrees (± 10 degrees) between them. You can start in any direction, it does not necessarily have to be North-East-South-West.

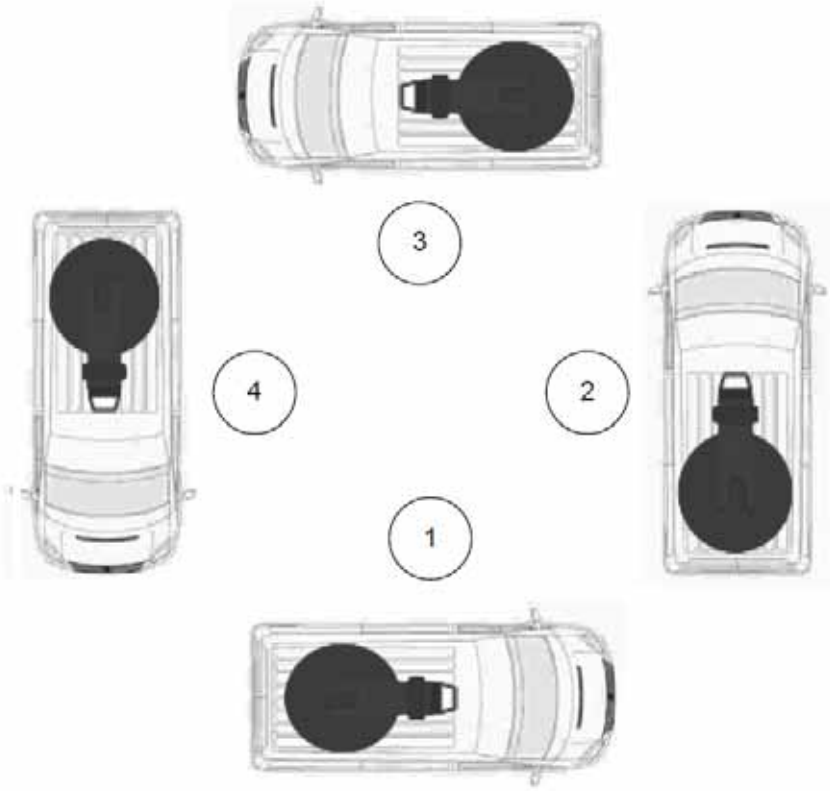


Figure 6-9: Compass calibration, vehicle positions

4. Park the vehicle in the first position.
5. Switch on the ACU. The ACU starts up and goes through an initialization procedure.
6. Wait until the Power LED and the Fail/Pass LED light steady green.
7. Connect a computer, start your browser and access the web interface.
8. Click **SERVICE** > **Calibration** and locate the section **Compass calibration**.

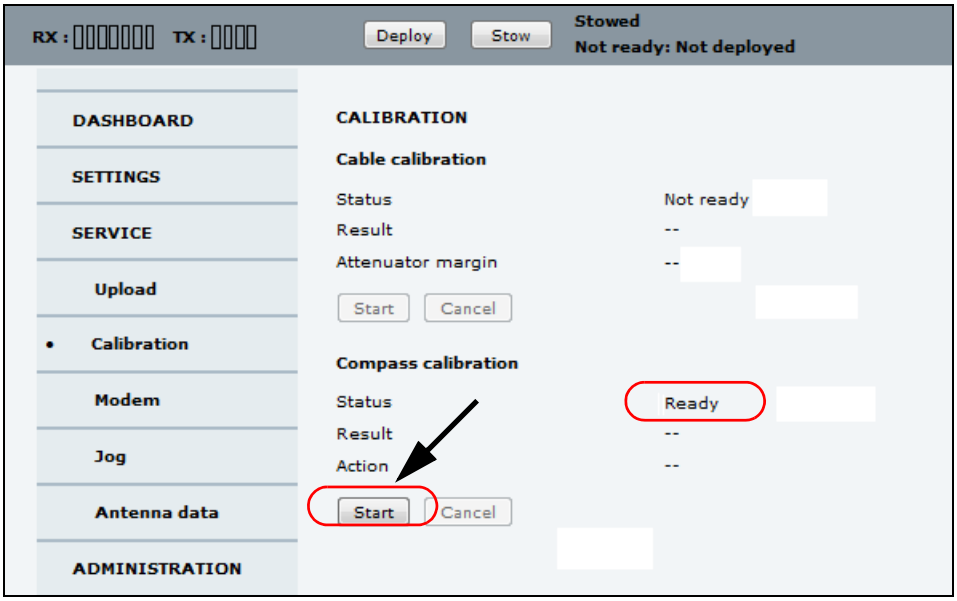


Figure 6-10: Web interface: SERVICE, Calibration, Compass calibration

9. When the **Status** field under **Compass calibration** shows **Ready**, click **Start**. The first calibration step begins. When the first step is completed, the **Result** field shows **Done** and the **Start** button changes to a **Continue** button.
10. When the first part is completed, move the vehicle so that it is parked approximately on a 90 degrees angle relative to the previous position, see Figure 6-9.
11. Click **Continue**.
12. When the **Result** field shows **Done**, move the vehicle 90 degrees again, so that it is parked approximately on a 180 degrees angle relative to the first position and click **Continue**.
13. When the **Result** field shows **Done**, move the vehicle 90 degrees again, so that it is parked approximately on a 270 degrees angle relative to the first position and click **Continue**.
14. When the **Result** field shows **Done** and the button changes to **Start** again, the compass calibration is completed.

### 6.1.14 Ku-Band version only: Cable calibration

If you have the Ku-Band version of the VSAT system, use the web interface to make a cable calibration to ensure that Tx power is calibrated at all frequencies.

**Important** For the system to work properly you must make a cable calibration in the following cases:

- After installation
- After replacing antenna cables
- After service

**WARNING!** Stay clear of the antenna during Cable calibration! The antenna is moving and transmitting during the calibration procedure. For Stay clear area see *Mechanical "stay-clear" area, EXPLORER 8100* on page vi or *Mechanical "stay-clear" area, EXPLORER 8120* on page vii. For radiation safety distance, see *Microwave radiation hazards* on page iv.

1. Deploy the antenna.
2. On the page **SERVICE** > **Calibration** click **Start** in the section **Cable calibration**.
3. Wait typically for 2 minutes for the calibration to finish.

A message is displayed when the calibration has been completed successfully.This screen shows how much attenuation margin is left for the antenna cable. This indicates whether the antenna cable and connectors are in good condition and well crimped.

When servicing the system it is recommended to make a cable calibration to check if the antenna cable is still in good order. If the attenuator margin changes by 2 dB or more after a cable calibration, it is recommended to do a P1dB compression measurement with the satellite operator to verify that the VSAT modem configuration is correct.

The VSAT system is calibrated now. If the calibration failed there will be a message on the calibration screen.

### 6.1.15 To line up or jog the antenna

You can use the Lineup/Jog function to deliberately offset the antenna position. This is useful when you define blocking zones, for testing and troubleshooting and sometimes also during commissioning.

1. Connect a PC to the **LAN1** or front **LAN** connector at the ACU.
   You may also use WLAN, if it is configured.
2. Open an Internet browser and type the default IP address: http://192.168.0.1.
3. If the antenna is not already deployed, click **Deploy** in the top bar of the web interface.
4. Navigate to the page **SERVICE** > **Jog** and click **Activate Jog** or **Activate Lineup**.
   - Lineup is typically used during commissioning. If you selected Lineup, the antenna will be able to transmit during the Lineup procedure. You can enter offsets for the

position coordinates of the active profile, but you cannot change the coordinates of the active profile.

- If you selected Jog, the antenna will not be transmitting, and you can enter any position coordinates.

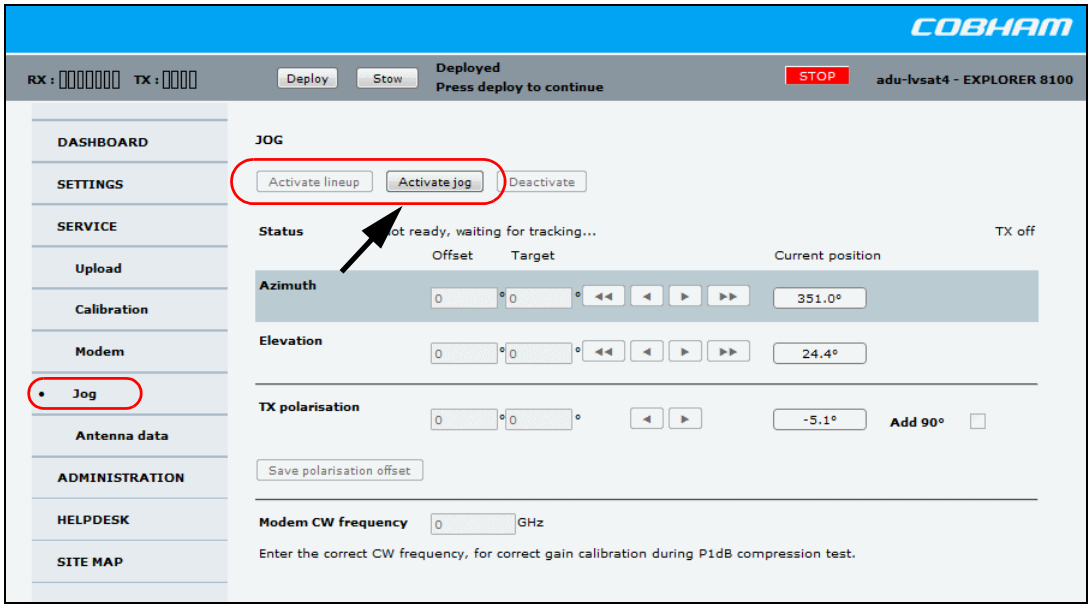


Figure 6-11: To line up or jog the antenna using the web interface

5. Click the arrow buttons for Azimuth or Elevation to change the offset, or type in specific values.
   ◀ and ▶ change the offset with 0.1˚ increments.
   ◀◀ and ▶▶ change the offset with 1.0˚ increments.
   The current position as well as the offset is shown on the screen.

   **Note** There may be slight deviations (or “random walk”) of a few tenths degrees.

6. **For Ka-Band**: Select **Deactivate** to return to normal operation and reactivate the selected satellite profile.
7. **For Ku-Band only**: Continue to the next steps.
8. Click the arrow buttons for **TX polarisation** to change the offset, or type in a specific value. You may also select **Add 90°**.
   The current position as well as the offset is shown on the screen.
9. Click **Save polarisation offset.**
10. Enter the correct **Modem CW frequency**.
    This is provided by the satellite operator, typically when talking to the satellite operator on the phone before doing a P1dB compression measurement.
11. When the lineup or jog procedure is ended, select **Deactivate** to return to normal operation and reactivate the selected satellite profile.

For information on the submenus **Modem** and **Antenna data**, see chapter 7, *Service and maintenance*.

## 6.1.16 Administration

In this section of the web interface you can configure the following administrative settings:

- *Access to the administration settings (user name, password)*
- *User permissions (guest login)*
- *To import and export a system configuration*
- *Reset to factory default*

### Access to the administration settings (user name, password)

You can log on as an administrator or as guest (user name: guest, password: guest). The Administration settings require an Administration user name and password. To log on as administrator, do as follows:

1. Enter the IP address of the VSAT system.
2. If you are prompted, enter the Administration user name and password. If not, select **ADMINISTRATION** and then enter the administrator user name and password.
   The default user name is **admin** and the default password is **1234**.
3. Click **Logon**.
4. Select **ADMINISTRATION**.
   The Administration page is now updated to let you change the user name and password or log off Administration.

**To change the administrator password, do as follows**:

1. In the **ADMINISTRATOR > User login** page, locate the section **Change Logon**.
2. Type in the new password and retype it on the next line.
3. Click **Change**. At the next logon the new password is required.

**To reset the administrator password, do as follows**:

1. Contact your service partner for a reset code. Report the serial number of the ACU. You find it in the **Dashboard, ACU serial number**.
2. Click the link **Forgot administrator password?** on the **LOGON** page.
3. Type in the reset code obtained from your service partner and click **Reset**.
4. Type in the user name **admin,** the default password **1234** and click **Logon**.

### To log off administration

If you have not entered anything for 30 minutes under **ADMINISTRATION**, you are logged off automatically. To log off manually, click **Logoff** in the **ADMINISTRATION** page.

## 6.1.17 User permissions (guest login)

You can manage user access to certain functions of the VSAT system. You can allow or deny users that are not administrators (user name: guest, password: guest) access to certain

functions and make these pages read-only. This is useful if you want to protect the system against unintended changes or tampering of the system.

**Important** Study this screen thoroughly and decide which areas of the VSAT system you want to give non-administrator users (user name: guest) access to.

To set up the user permissions for guest users, do as follows:

1. Select **ADMINISTRATION > User permissions**.

2. For each item under **ALLOW USERS TO**: select
   - **Yes** to allow the **guest user** access
   - **No** to block the **guest user** access to the settings. Then the pages are read-only, changes cannot be made by the guest user.

   **Change network**: Locks the page SETTINGS > Network. Use this page to change IP configuration of the LAN connectors of the ACU. For further information see *To configure the LAN network* on page 6-14.

3. Click **Apply**.

## 6.1.18 To import and export a system configuration

If you need to reuse a configuration in another VSAT system, you can save the current configuration to a file, which can then be loaded into another VSAT system. You can also use this feature for backup purposes.

**Important** Load and save configurations can only be done with the same software version in the units involved.

The configuration file contains all the settings you have entered during system setup: satellite profiles, modem profiles, LAN setup, user permissions etc.

**To save a configuration to a file, do as follows**:

1. Select **ADMINISTRATION > Export/import config**.
2. Click the button **Export**. Follow the download instructions on the screen. You can use this configuration file for upload to another VSAT system,

**To load a configuration from a file, do as follows**:

1. Select **ADMINISTRATION > Export/import config**.
2. Click the button **Browse** and locate the configuration file (.cfg file) you want to upload. Then click the button Open.
3. In the web interface click the button **Upload**.

**To clone a system configuration, do as follows**:

1. Reset to factory default, see the following section for details.
2. Import a configuration from file, see section above.

### 6.1.19 Reset to factory default

To reset to factory default settings, do as follows:

1. Select **ADMINISTRATION > Factory default**.

   **Important** Reset to factory default will delete or reset all the settings listed below!

   - Navigation settings
   - All added satellite profiles
   - All added modem profiles
   - Changes in the network setup
   - User permissions
   - ACU display: brightness setting

2. Click **Reset to factory default**.

**Note** **After resetting to factory default**: When you power on the system, make sure the antenna is connected to the ACU. If not, the list of available modem types under **SETTINGS > Modem profiles** may not be correct, because the ACU cannot determine whether the antenna type is Ka or Ku.

### 6.1.20 Help desk

The Help desk pages in the web interface are described in the Service chapter under *Help desk and diagnostics report* on page 7-2.

# 6.2 Keypad and display menus

## 6.2.1 Keypad and display

With the display menu you can do basic operations such as deploy, stow and stop the antenna or apply the service function. You can also select which satellite profile to use.

In the menu system you can also see how the system has been configured. To configure the system, use a connected PC and the web interface.

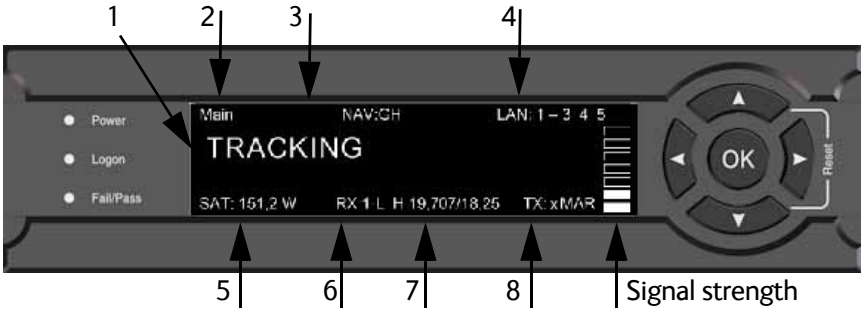


Figure 6-12: Display and keypad of the ACU (example)

1. Current status of the VSAT system (examples):
   **NOT READY**: **NOT DEPLOYED**
   **TRACKING**
   **ANTENNA SW UPLOAD**
   **ANTENNA POST (Power-On Self Test)**
   **READY (waiting for data from the modem or no satellite profile selected)**
   **SAFE MODE (used e.g. for software recovery)**
2. Current menu, see *The menu tree* on page 6-29.
3. **NAV**: Navigational information
   First letter: **G** (Valid position signal received from the GNSS module) or **g** (No valid GNSS fix)
   Second letter: **H** (Valid heading data) or **h** (No valid heading data).
4. **LAN**: LAN connectors used, 1, 2, 3, 4, 5, –.
5. **SAT**: Longitude, satellite position of the currently active satellite profile.
6. **RX**:
   **1** (RX Lock, - or 1),
   **L** (RX polarization of currently active satellite profile: **L** (left-hand), **R** (right-hand), **H** (Horizontal) or **V** (Vertical)).
7. RF tracking frequency in GHz and LNB LO Frequency.
8. **TX**: <TX mute> <Modem TX> <ODU TX> <TX pol>
   - <TX mute> = [x,X] (Muted by external signal on User I/O connector: **X** (muted) or **x** (not muted).
   - <Modem TX> = [m,M], **M** (valid TX signal on modem) or **m** (no valid TX signal on modem)
   - <ODU TX> = [a,A] **A** (valid TX signal on antenna) or **a** (no valid TX signal on antenna)

- <Tx pol> = [-,L,R,H,V] (TX polarization of currently active satellite profile: **L** (left-hand), **R** (right-hand), **H** (Horizontal), **V** (Vertical) or **-** (unknown).

After 1 hour the display is dimmed to lowest intensity. Press any key to light up the display.

### 6.2.2 Brightness of the display

To adjust the brightness do the following:

1. Press and hold **OK** for a short moment until **BRIGHTNESS XXX%** is displayed (XXX is the current brightness value).
2. Hold **OK** + press ▲ to brighten or ▼ to darken display.
3. Release **OK** to leave the brightness menu.

### 6.2.3 Navigating the menus

Use the keypad to navigate the menus.


- Press **OK** or ▶ to select a menu item.
- Use the arrow keys ▲ and ▼ to go through the menu items or enter a number, digit by digit.
- Use the arrow keys ◀ and ▶ to go through the settings and move from one digit to the next.
- Press **OK** to select a setting.
- Press ◀ again to move one level up. If applicable, confirm to store the new setting by pressing **OK**.

## 6.2.4 The menu tree

With the display menu you can do basic operations such as deploy, stow and stop the antenna or apply the service function. You can also select which satellite profile to use.

In the menu tree you can also see how the system has been configured. To configure the system, use a connected PC and the web interface.

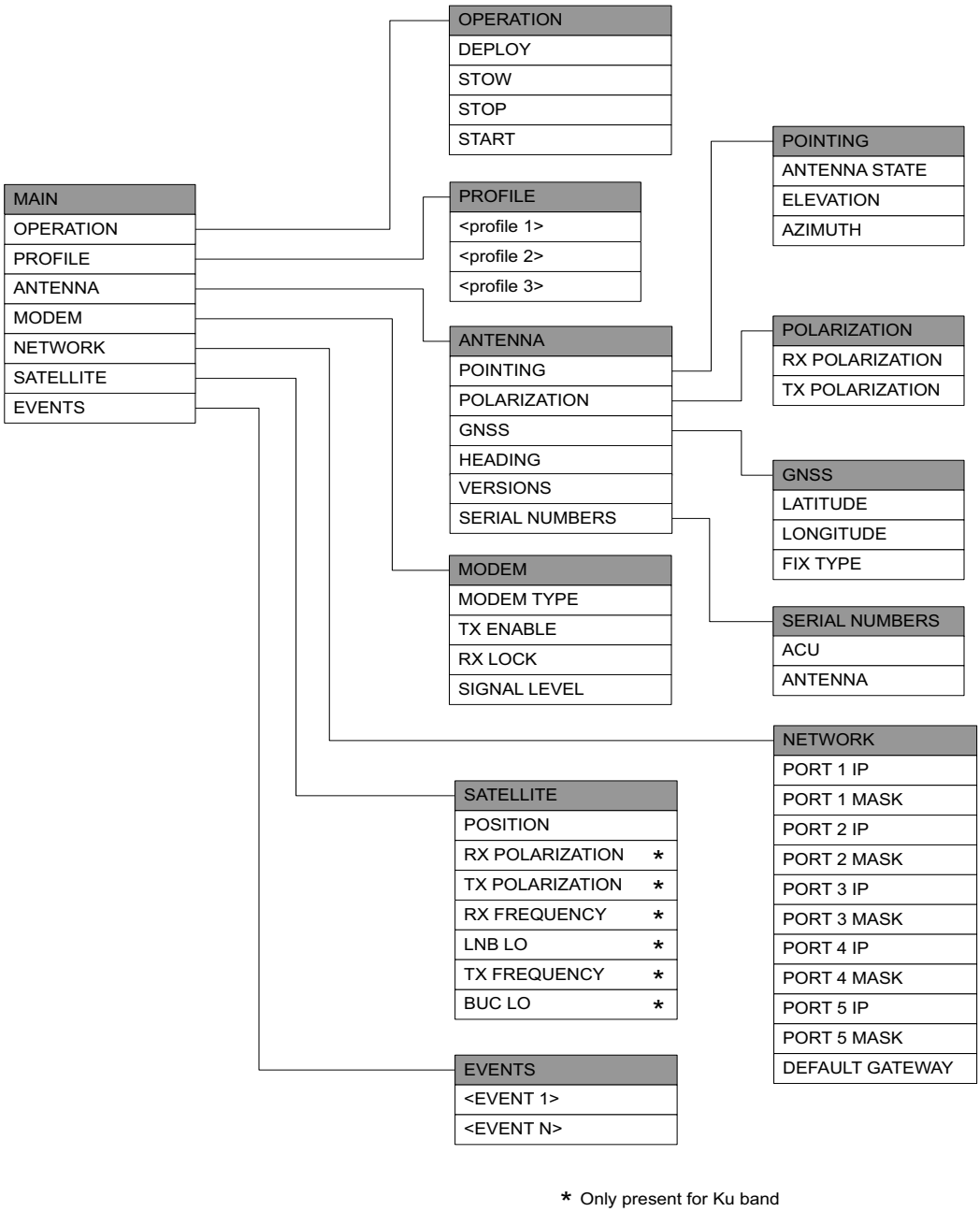


Figure 6-13: Menu tree in the display

## Top-level menu

| Top-level menu | Description |
|---|---|
| MAIN | View with current status of the VSAT system.<br>The status screen is displayed again after a time out of 10 minutes. New events are shown in this display. If an event is displayed, press **OK** to jump directly to the menu **EVENTS** for viewing the currently active events.<br>Press any key (except left arrow) to enter the menu at **MAIN**. |
| OPERATION | Allows you to deploy, stow or stop the antenna. |
| PROFILE | Allows you to select which satellite profile to use. |
| ANTENNA | Shows the current antenna parameters, position, polarization, software version and serial numbers of the antenna and ACU. |
| MODEM | Modem information, including modem type, signal level and status for TX enable and RX lock |
| NETWORK | Shows the IP addresses and netmasks of the LAN connectors on the ACU, and the default gateway. |
| SATELLITE | Current satellite information. This information is configured using the web interface. |
| EVENTS | View system events. Number of active events are shown as: X ACTIVE EVENTS in the **MAIN** display. Press **OK** to see the list. |

Table 6-5: Top-level menus

## Menu descriptions

| OPERATION | Description |
|---|---|
| DEPLOY | Press **OK** to deploy the antenna |
| STOW | Press **OK** to stow the antenna |
| STOP | Press **OK** to stop the antenna immediately.<br>The status shows STOPPED |
| START | Press **OK** to start the antenna when it has been stopped.<br>After starting the antenna you must deploy it again. |

Table 6-6: OPERATION menu

| PROFILE | Description |
|---|---|
| <PROFILE> | Lists the available satellite profiles. Use ▲ and ▼ to go through the profiles and press **OK** to select the profile you want to activate. |

Table 6-7: PROFILE menu

| ANTENNA | Description |
|---|---|
| POINTING | ANTENNA STATE: Current state of the antenna, e.g. TRACKING<br>ELEVATION: Current elevation angle of the antenna<br>AZIMUTH: Current azimuth of the antenna, with reference to North |
| POLARIZATION | RX POLARIZATION: HORIZONTAL, VERTICAL, LEFT or RIGHT<br>TX POLARIZATION: HORIZONTAL, VERTICAL, LEFT or RIGHT |
| GPS | LATITUDE: current latitude, read from GNSS module<br>LONGITUDE: current longitude, read from GNSS module<br>FIX TYPE: 2D or 3D or USER (USER means the position is entered manually) |
| HEADING | Orientation of the mounting base in relation to estimated North. |
| VERSIONS | Current software version of the antenna |
| SERIAL NUMBERS | Serial numbers of the antenna and the ACU |

Table 6-8: ANTENNA menu

| MODEM | Description |
|---|---|
| MODEM TYPE | Current modem type. |
| TX ENABLE | On or off, information delivered by the connected VSAT modem. |
| RX LOCK | On or off, information delivered by the connected VSAT modem. |
| SIGNAL LEVEL | Current input signal level from the VSAT modem, in dB. |

Table 6-9: MODEM menu

| NETWORK | Description |
|---|---|
| PORT 1 IP | Current IP address for LAN1 (service port) |
| PORT 1 MASK | Current netmask for LAN1 |
| PORT 2 IP | Current IP address for LAN2 (modem port) |
| PORT 2 MASK | Current netmask for LAN2 (modem port) |
| PORT 3 IP | Current IP address for LAN3 |

Table 6-10: NETWORK menu

| NETWORK | Description |
|---|---|
| PORT 3 MASK | Current netmask for LAN3 |
| PORT 4 IP | Current IP address for LAN4 |
| PORT 4 MASK | Current netmask for LAN4 |
| PORT 5 IP | Current IP address for LAN5 |
| PORT 5 MASK | Current netmask for LAN5 |
| DEFAULT GATEWAY | Current default gateway |

Table 6-10: NETWORK menu (Continued)

| SATELLITE | Description |
|---|---|
| POSITION | Current satellite position |
| RX POLARIZATION[a] | -, HORIZONTAL, VERTICAL, LEFT or RIGHT |
| TX POLARIZATION[a] | -, HORIZONTAL, VERTICAL, LEFT or RIGHT |
| RX FREQUENCY[a] | Current RX frequency |
| LNB LO[a] | LNB LO frequency |
| TX FREQUENCY[a] | Current TX frequency |
| BUC LO[a] | BUC LO frequency |

Table 6-11: SATELLITE menu

a. Only for Ku antenna

| EVENT | Description |
|---|---|
| <EVENT> | In this menu all active events are listed. Use ▲ and ▼ to go through the active events.<br>Events can be of the type WARNING or ERROR.<br>If a new event occurs or there is a change in the event list while you are in the **EVENTS** menu, a * is shown in the upper left corner of the display, next to the menu name. Press **OK** to update the EVENTS list, the * will be removed.<br>A **>** means the event text is longer than the display. Press **>** to see the remaining text. |

Table 6-12: EVENTS menu

**Example**: **EVENT 1/4***: This is the first event out of a list of 4 and there has been a change in the list. EVENT 1/4 will always be shown, the * indicates a change.

# 6.3 SNMP support

The EXPLORER 8000 series supports SNMP v2 requests to retrieve configuration and present settings. SNMP is always enabled on all Ethernet interfaces. The SNMP community string is **public**. The EXPLORER 8000 series offers via SNMP most of the data that are available from the DASHBOARD web pages. Detailed documentation about supported OIDs can be found in the MIB file for your VSAT system.

The MIB entries are grouped as shown below:

- System configuration
- Navigation coordinates
- Antenna pointing
- Dashboard and profile
- Tracking receiver

**Note** None of the SNMP values need to be polled more often than once a minute. Polling SNMP values more frequently will impact the performance of the ACU.

You can download the ACU MIB file directly from the ACU:

1. Go to the **HELPDESK** page.
2. Click the link **Download MIB file**
3. Save the file on your computer.

You can also download the ACU MIB from Cobham eSupport web site.

# Service and maintenance

This chapter has the following sections:

- *General support*
- *Software update*
- *Status signalling with LEDs and status messages*
- *To stow and unfold the antenna manually*
- *BUC installation*
- *Antenna data*
- *To return units for repair*

## 7.1 General support

### Contact for support

If this manual does not provide the remedies to solve your problem, contact your service provider.

### 7.1.1 Preventative maintenance

The EXPLORER 8000 series is constructed to require a minimum amount of regular maintenance.

**WARNING!** **Potentially hot surface** when the system is operated in hot environments without the possibility for ventilation. Contact may cause burn. Allow to cool before servicing.

Make the following checks on a regular basis:

- Inspect the reflector front surface for physical damage including chips and cracks. Any substantial damage can affect antenna performance and may require the reflector to be replaced.
- Check the feed horn membrane for cracks or damage.
- Check that the mechanical connection between reflector arm and Feed arm is firm. There must be no slackness in the connection between reflector arm and Feed arm.
- Check the flexible wave guide between the BUC and the feed for cracks or damage.
- Check that the polarization module can rotate.
- Use low-pressure washing and soft scrubbing to rinse off grit and reduce wear.

### 7.1.2 Help desk and diagnostics report

During the installation you can enter the support contact for this installation.

1. To access the Help desk (Support page), select **HELPDESK** from the left navigation pane.
2. Under **Contact**, click the link, enter support contact information and click **Apply**.
3. Under **MIB file,** you can download a MIB file from the ACU for retrieving configuration and present settings via SNMP. For details, see section 6.3 *SNMP support* on page 6-33.
4. Under **User manual** you can either download the built-in user manual to your PC or upload a newer version of the manual from your PC to the ACU.
   - Click the **Download manual** link to see the manual.
   - To upload a different version to the ACU, click **Browse...** and select the manual from your PC, then click **Upload**.
5. At **Legal notices** you can see the licence text for the source code of the parts of the EXPLORER 8000 series software that fall under free and open source software.
6. In the section **Download Reports** click the button **Download**. If you need to include modem information in the report, select **Modem** and click **Apply** before you download the report. The Diagnostic report (txt file) is downloaded to your computer.

The Diagnostics report contains information relevant for the service personnel during troubleshooting. It is also useful documentation of the current setup. It contains all parameters set during configuration. The main sections are:

- Software
- System
- Hardware
- Setup - System data
- Network - LAN Configuration
- Modems
- Satellites - Satellite profiles
- Operation - Current modem and navigation parameters.
- POST - results of the Power-On-Self-Test
- Active Events - lists the currently active events
- Events - List of all cleared events.
- System log

### 7.1.3 Event list

When an event is registered, the web interface shows an event icon ⚠ in the icon bar as long as the event is active. The ACU display shows also active events. To view the event list with active events, click the event icon from the icon bar at the top of the web interface, or select **HELPDESK > Event list** from the left navigation pane.

The **Event list** page shows a detailed list of active events and notifications including the time of the first occurrence, ID and severity of the event message, and a short text describing the error. Active events are cleared from the event list when the error is cleared. They are moved to the section **Notifications** and are displayed for 24 hours. All entries in the section **Notifications** are deleted automatically after 24 hours and after restart of the system. For a list of all events with description, error code (ID), explanation and remedy see *System messages* on page E-1.

### 7.1.4 Self test

You can start a self test of the antenna and ACU.

1. Click **Self test** in the **HELPDESK** page.
2. Click the menu item **Self test**.

**Important** Warning! The VSAT system will reboot to perform the self test. Rebooting the ACU will terminate all existing connections.

### 7.1.5 Restart

To restart the system do the following:

1. Press and hold ▲ and ▼ until the ACU display shuts down and the antenna reboots.


Figure 7-1: To restart the system

2. Wait until the antenna has rebooted and is operational again. The last active satellite profile will be used.

If you want to reset the VSAT system to factory defaults, see *Reset to factory default* on page 6-26.

# 7.2 Software update

## 7.2.1 Prerequisites

The following items are required to make a software update:

- One computer with a standard Ethernet port available.
- A standard Internet browser.
- 1024 × 768 pixels or higher display resolution (best viewed with small fonts).
- One straight LAN cable.
- Access to the file with the new software.

## 7.2.2 Software update procedure

### To update the VSAT system software

The antenna software is automatically updated when the ACU software has been updated.

**Note** Software update should only be done by qualified service personnel.

1. Power up the VSAT system, i.e. switch on the ACU.
2. Connect a PC to LAN interface 1 (Service port, standard Ethernet).
   If you want to use another LAN port to access the web interface you must configure it according to your network requirements. See *To configure the LAN network* on page 6-14 for more information.
3. Open your Internet browser and enter the IP address of the VSAT system. The default IP address is http://192.168.0.1.
4. Type in the user name **admin** and the password **1234** to access the **Dashboard**.
5. The web interface shows the **DASHBOARD** page.
6. Click **SERVICE** in the navigation pane.
   The **UPLOAD** page is displayed.


Figure 7-2: Software update with the web interface

7. Click **Browse...** and locate the new software file.
8. Click **Upload**.

**Important** Do not browse away from the upload page. This will terminate the upload process. Wait for the browser to reload automatically.

9. You can select **Enable automatic rollback on failure**, then the system returns to the previous software if the installed software fails.
10. Click **Switch to this version** if you want to force the system to use the alternative software version stated under **Software versions**.

Note that the upload procedure takes a couple of minutes. When done, the ACU automatically restarts with the new software version.

The start-up procedure after a software upload takes longer than the usual start-up time, as the software in the antenna must also be updated. The ACU display shows: **ANTENNA SW UPLOAD**.

## To verify the software update

1. The software version can be viewed in the **DASHBOARD** window of the web interface.
2. After completing the software update procedure, the VSAT system will perform a POST (Power On Self Test).
3. When the POST has finished, the green Pass/Fail LED on the keypad must become steadily green. Verify that the Pass/Fail LED is not red nor flashing orange once every 2 seconds. Wait until the Pass/Fail LED is green.

4. Verify that the software update has been completed successfully. You find the software version number in the **DASHBOARD** window of the web interface.

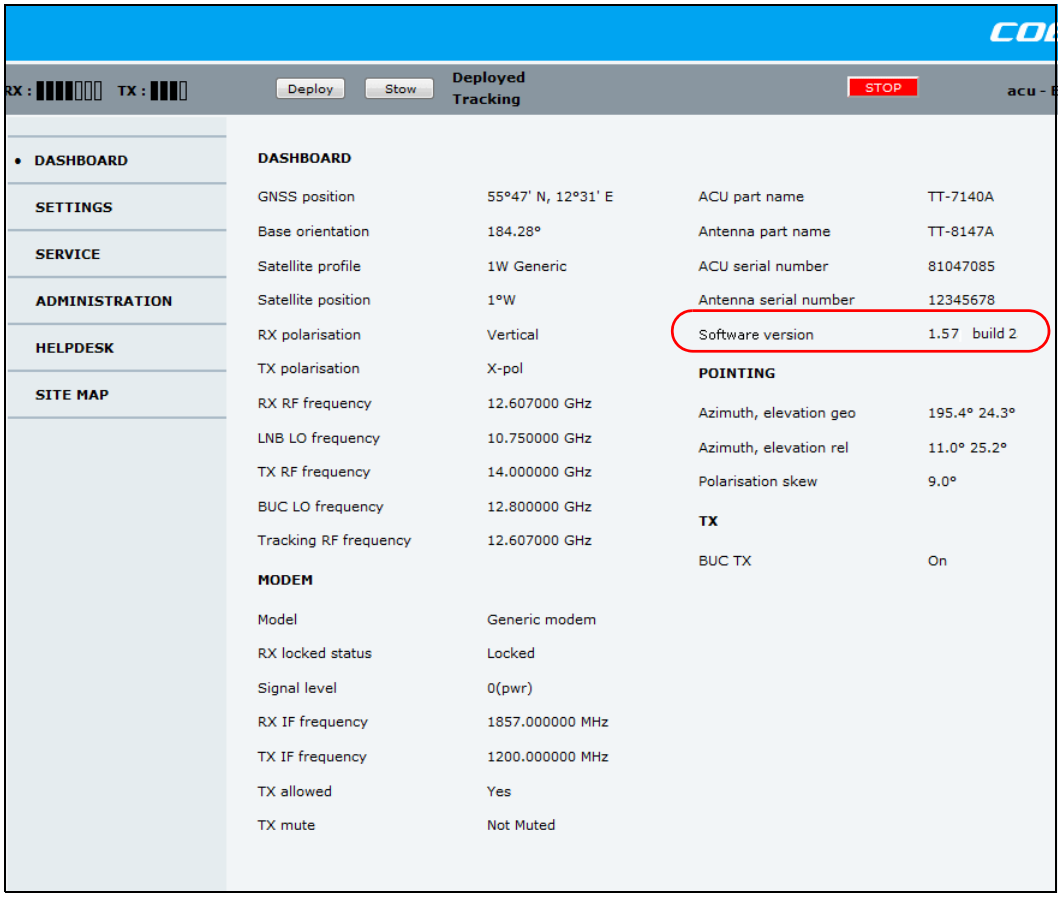


Figure 7-3: Verifying software update

## Software recovery procedure (SAFE MODE)

To recover from a failed software upload, turn off the ACU and turn it on again. Then repeat the upload procedure as described in *Software update* on page 7-4. If this does not help, use the following procedure:

1. Switch off the ACU.
2. Press and hold down the arrow keys ◀ and ▶ simultaneously.
3. While holding down ◀ and ▶, Switch on the ACU and wait for the display to show **SAFE MODE** in the top left corner.
4. Release the arrow keys.
5. Connect a PC to LAN port 1 (service port) of the ACU.
6. Set the IP address of the PC to **static**: **IP:192.168.0.2**, **Subnet**: **255.255.255.0.**
7. Open an Internet browser and type http://192.168.0.1 (Default IP address of the ACU). The software upload page opens.
8. Click **Browse...** and locate the software file.
9. Click **Upload**.

The upload procedure takes a couple of minutes. When done, the ACU automatically restarts with the new software version.

**Important** Do not browse away from the upload page. This will terminate the upload process. Wait for the browser to reload automatically.

## Software update (VSAT modem)

Refer to the documentation for your VSAT modem.

# 7.3 Status signalling with LEDs and status messages

## Built-In Test Equipment

The VSAT system has a Built-In Test Equipment (BITE) function in order to make fault diagnostics easy during service and installation. The BITE test is performed during:

- Power On Self Test (POST), which is automatically performed each time the system is powered on.
- Person Activated Self Test (PAST), which is initiated by starting a self test in the web interface **HELPDESK > Self test**.

For details on error messages after a POST or a self test see *Event list* on page 7-2.

## Means of signalling

The VSAT system provides various methods for signalling the system status.

**LEDs** on the front panel of the ACU are used to signal:

- Power on/off
- Logon
- Fail/Pass

See *LEDs on the keypad of the ACU* on the next page.

**Display and web interface**: In addition to general status messages, the display and the built-in web interface of the ACU show any events (BITE error codes) with a short message describing each error.

See *System messages* on page E-1.

### 7.3.1 LEDs on the keypad of the ACU

There are 3 LEDs: Power, Logon and Fail/Pass LED.

| LED | Behavior | Description |
|---|---|---|
| Power | Steady green | Power supply OK |
| | Steady red | Power supply failure |
| | Off | No power |
| Logon | Flashing green | Current status is displayed:<br>• Searching satellite<br>• Identifying satellite<br>• Carrier lock & TX enabled from modem |
| | Steady green | Satellite link established |
| | Off | No satellite link acquired |
| Fail/Pass LED | Steady red | A fault which prevents operation is present in the system (ACU, antenna, MODEM). |
| | Flashing green | A Power On Self Test (POST) or Person Activated Self Test (PAST) in progress. The current status is displayed. |
| | Flashing red | Active BITE failure or warning. The event is shown in the ACU display. |
| | Steady green | No faults. |

Table 7-1: LEDs on the ACU

# 7.4 To stow and unfold the antenna manually

**CAUTION!** Always release the stow lock before you operate the antenna manually! The stow lock will be damaged if it is not released before you operate the antenna manually.

## 7.4.1 Manual stow

If for some reason the system is inoperable, e.g. due to loss of power or similar, you can stow the antenna manually.

Do as follows:

1. Find the Hex L key and the Hand crank included in the delivery.
2. If the Feed arm of the antenna is not pointing straight, aligned with the antenna base frame, you must adjust the Azimuth as described in the next steps.
3. Find the adjustment location for Azimuth shown in the picture below and unscrew the cover for the adjustment bolt.

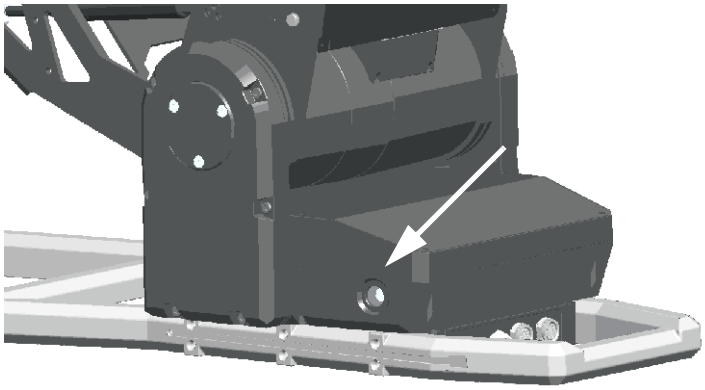

Figure 7-4: Manual stow, azimuth adjustment

4. Use the Hand crank on the Azimuth adjustment bolt to adjust the Azimuth until the antenna is aligned with the base frame of the antenna.
5. **For Ku-version only**: Before adjusting the Elevation, turn the OMT/LNB assembly 45 degrees by hand to make sure that the Flexible Wave Guide does not get caught between the Feed arm and the base frame.

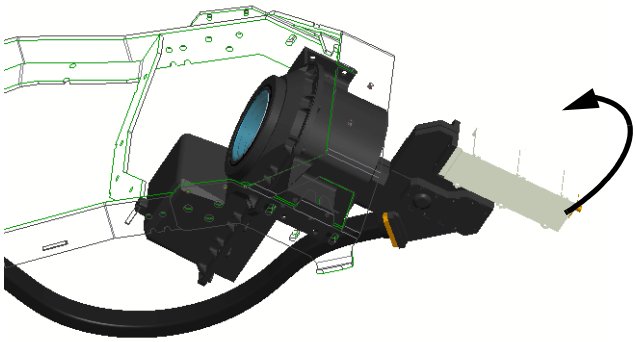

Figure 7-5: Manual stow, Turn OMT/LNB assembly 45 degrees

6. In both sides of the antenna, use the hex L key to remove the screws for the circular covers, shown below.

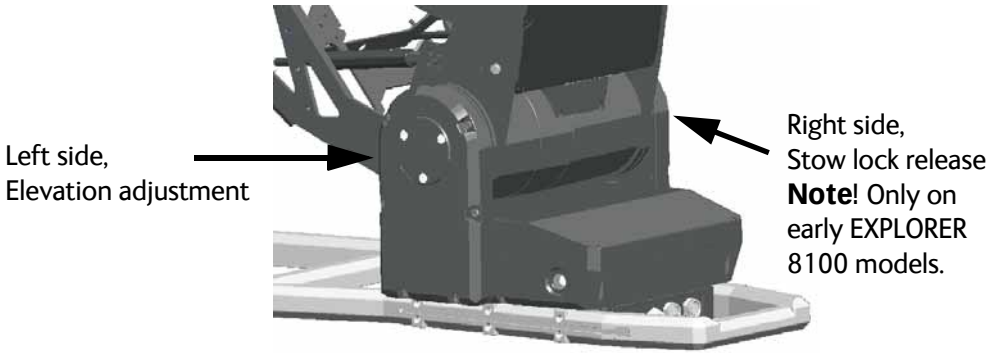


Figure 7-6: Manual stow, covers for elevation adjustment and stow lock release

7. **This step is only for antennas with the stow lock mechanism (**marked with this warning on the elevation adjustment cover).


On the right side of the antenna, insert the hex L key at the top of the L-shaped hole, tip it downwards and follow the direction of the hole to the left to release the lock.

**Important** Leave the hex L key in the Released position while adjusting the elevation.

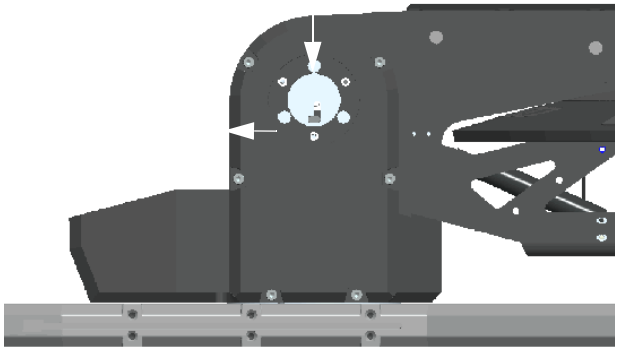

Figure 7-7: Manual stow, release stow lock

8. In the left side, use the Hand crank to adjust the Elevation downwards.

**Note** Manual adjustment of the Elevation requires more force than adjustment of the Azimuth.

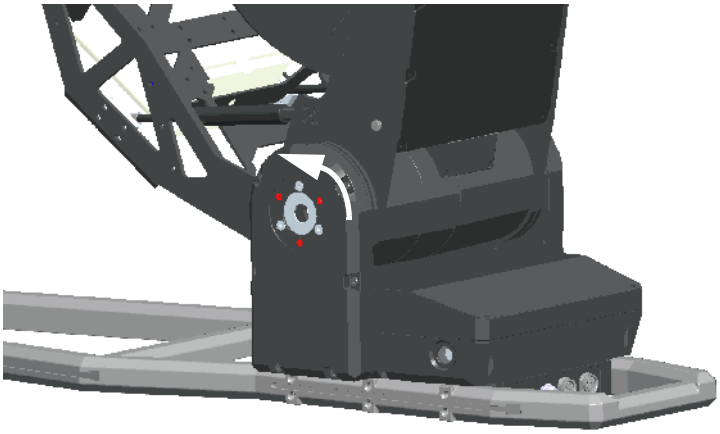

Figure 7-8: Manual stow, elevation adjustment

9. When the Feed arm is close to the base frame, check that the rubber bumpers on the base frame touch the feed arm correctly in both sides (straight and symmetrically).
10. Continue adjusting with the Hand crank until the rubber bumpers are slightly compressed and the antenna is completely stowed.
11. Remove the screw driver from the Elevation stow lock release mechanism.
12. Remount the three covers (Elevation adjustment, Elevation stow lock release and the small cover for the Azimuth adjustment).

## 7.4.2 Manual unfolding

**CAUTION!** For EXPLORER 8100 models with stow lock: Always release the stow lock before you unfold the antenna manually! The stow lock will be damaged if it is not released before the antenna is unfolded.

Do as follows:

1. In both sides of the antenna, use a hex L key to remove the screws for the circular covers, shown below.

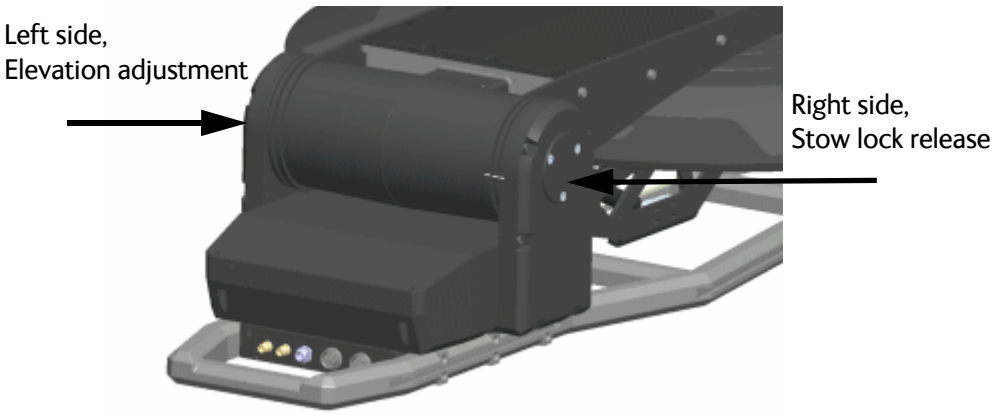


Figure 7-9: Manual unfold, covers for elevation adjustment and stow lock release

2. **This step is only for antennas with the stow lock mechanism (**see step 7 in the previous section).
   Insert the hex L key at the top of the L-shaped hole, tip it downwards and follow the direction of the hole to the left to release the lock.

   **Important** Leave the hex L key in the Released position while adjusting the elevation.

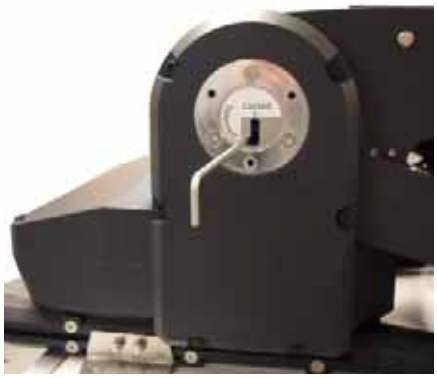

Figure 7-10: Manual unfold, release stow lock

3. Go back to the left side of the antenna and use the Hand crank to adjust the Elevation to the wanted position.

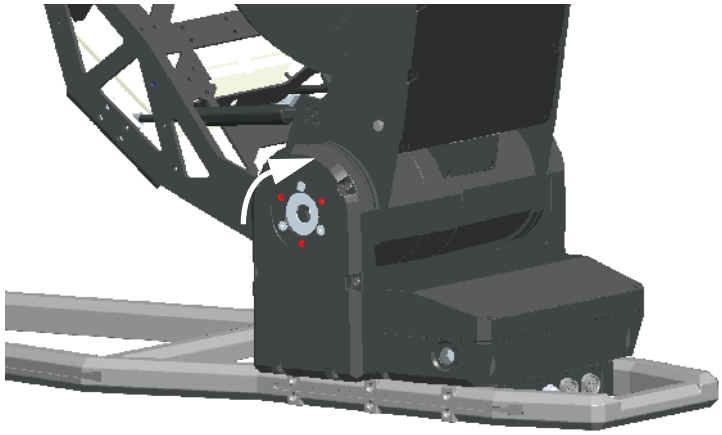

Figure 7-11: Manual unfold, elevation adjustment

4. When the Feed arm is free of the stow brackets, you can adjust the azimuth as described in step 3 and step 4 in the previous section.
5. Remove the screw driver from the Elevation stow lock release mechanism.
6. Remount the covers for the adjustment locations (Elevation adjustment, Elevation stow lock release and the small cover for the Azimuth adjustment).

# 7.5 BUC installation

If you have purchased the “no BUC” antenna version, you must install a BUC on the antenna. The following BUCs are available from Cobham SATCOM:

- 8 W BUC, part number TBD
- 20 W BUC, part number TBD

Brackets for mounting these BUCs are also available from Cobham SATCOM.

## 7.5.1 Prerequisites

If you are mounting a 3rd party BUC, make sure that the BUC complies with the following specifications:

Maximum power consumption of BUC (using 500 W ACU):
90W @ 55˚ ambient and input voltage of 90Vrms
185W @ 50˚ ambient and input voltage of 100Vrms

Maximum current using the N-connector: 6.3 A (derated)

Maximum weight of BUC: 6 kg

Maximum size:
Make sure the BUC complies with the maximum dimensions shown in Figure 7-12 below.

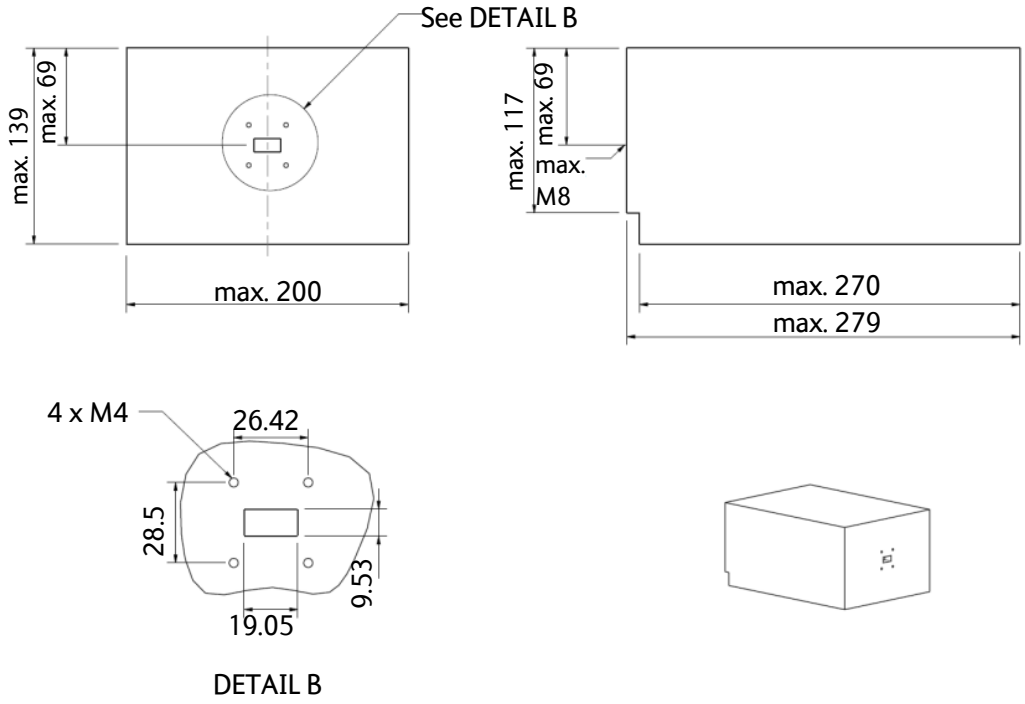


Figure 7-12: Max. dimensions for BUC

## 7.5.2 Installation

The mounting method differs depending on the BUC and brackets used. Make sure the requirements in the previous section are met.

1. Install the BUC on the feed boom, using suitable brackets for the form factor of the BUC. Brackets for the Cobham SATCOM BUCs are available from Cobham SATCOM.

Figure 7-13: BUC installation

2. Connect the BUC to the N-connector on the front of the antenna, right below the reflector (BUC-TX).

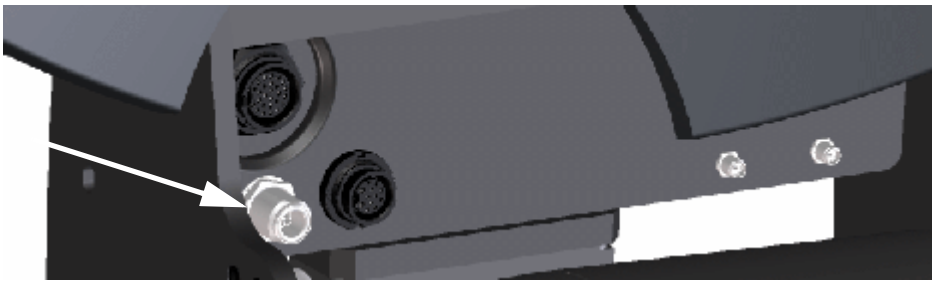

Figure 7-14: BUC-TX connector

3. When the BUC is installed, use the command **`antenna_data`** to enter the data for the new BUC. See *antenna_data* on page D-10.

## 7.6 Antenna data

The ACU contains a backup of the antenna data from the PCM unit in the antenna. When the ACU or antenna has been exchanged, you must make sure the units are using the same antenna data:

1. Select **Service** > **Antenna data**.
2. Select the PCM unit in order to copy the antenna data into the ACU.

## 7.7 To return units for repair

Should your Cobham SATCOM product fail, please contact your dealer or installer, or the nearest Cobham SATCOM partner. You will find the partner details on www.cobham.com/satcom/service-and-support/cobham-satcom-service-and-support where you also find the Cobham SATCOM Self Service Center web-portal, which may help you solve the problem. Your dealer, installer or Cobham SATCOM partner will assist you whether the need is user training, technical support, arranging on-site repair or sending the product for repair. Your dealer, installer or Cobham SATCOM partner will also take care of any warranty issue.

# Technical specifications

This appendix has the following sections:

- *General specifications*
- *Antenna specifications*
- *VSAT LNB Data Sheet (physical LNB)*
- *VSAT 8W BUC Data Sheet (Extended)*
- *VSAT 20W BUC Data Sheet (Extended)*
- *ViaSat eTRIA*
- *Antenna dimensions*
- *ACU specifications*
- *ACU dimensions*

## A.1 General specifications

| Item | Specifications, EXPLORER 8100 | Specifications, EXPLORER 8120 |
|---|---|---|
| Certification | CE (Safety, EMC & use of spectrum etc.), FCC and IC (radiation pattern etc.), Eutelsat (pointing, radiation pattern etc.) | |
| System power supply range (input via ACU) | 100-240 VAC, 50-60 Hz nom.<br>90-264 VAC, 43-67 Hz max range | |
| Total system power consumption | | |
| 8 W Ku-BUC | 190 W typ. 440 W peak | TBD |
| 20 W Ku-BUC | 290 W typ. 540 W peak | TBD |
| 3 W Ka-TRIA | 160 W typ. 410 W peak | N/A |

Table A-1: General specifications

# A.2 Antenna specifications

Table A-2: Antenna specifications

| Reflector | |
|---|---|
| Size (nominal)<br>EXPLORER 8100<br>EXPLORER 8120 | <br>1.0 m<br>1.2 m |
| Optics | Offset, Prime focus, F/D ˜0.8 |
| Material | Carbon fiber sandwich |

| Ka-Band w. eTRIA | Receive | Transmit |
|---|---|---|
| Feed | Switchable circular X-pol, included in eTRIA | |
| Frequency range (GHz) | 19.7 - 20.2 | 29.5 - 30.0 |
| Gain (dBi) @ eTRIA in/output | 43.9 - 44.5 | 47.3 - 48.1 |
| Axial ratio (dB) within -1dB contour | 1.66 | 1.7 |
| Polarization | LHCP or RHCP | RHCP or LHCP |
| eTRIA output power (W) | 3 | |
| G/T (dB/˚K) | 22.2 | |

| Ku-Band | Receive | Transmit |
|---|---|---|
| Feed | Rotating linear X-pol 2-port | |
| Frequency range (GHz) | 10.70 - 12.75 | 13.75 - 14.50 |
| Gain (dBi) @ LNB input/BUC output | 39.3 - 40.8 | 42 - 42.2 |
| X-pol discrimination min. (dB) within -1dB contour | 21.3 | 24.1 |
| Polarization | Linear | Linear X-pol |
| Max On-Axis EIRP Spectral Density (dBW/40 kHz) per FCC 25.226 (1.5˚)/FCC 25.226 (2.0˚)/ Eutelsat EESS502 (1.0˚) | 34.5 / 36.4 / 34.5 | |
| G/T (dB/˚K) @ 30˚ elev. @ 25˚ C (10.70 - 12.75 GHz) | 18.3 - 19.5 | |
| BUC output power (P1dB min.) (W) | Depends on installed BUC. See sections A.4 and A.5 for BUC specifications | |

| Mechanical characteristics | |
|---|---|
| Axis Drive System | 2-Axis Positioner + pol axis for Ku-band |
| Positioner Geometry | Elevation over Azimuth |
| Travel:-Azimuth | ±195˚ |
| Travel:-Elevation | 0˚ to 100˚ relative to antenna base |
| Emergency Drive | Hand crank on Azimuth & Elevation |
| Travel:-Polarization (Ku only) | -95˚ to +95˚ |
| Vehicle tilt for full sky coverage (10 - 90˚ satellite elevation over the horizon) | 10˚ (18%) max. |
| Vehicle tilt, operational | 32˚ (60%) max. |
| Satellite orbit inclination | +/-15˚ max. |
| Positioner angular speed | 9˚/s max. |
| Live tracking | Yes - if enabled by user |
| Roof mount | Yes |
| Thule bar mount | Yes |
| Trailer mount | No - additional vibration damping required, contact factory |

| Weights and measures | | |
|---|---|---|
| | EXPLORER 8100 | EXPLORER 8120 |
| Antenna weight Ku / Ka | 67 / 64 kg (153 /141 lbs) incl. 8 W BUC, LNB etc. | 72 kg/NA (159 lbs/NA) incl. 8 W BUC, LNB etc. |
| Antenna length | 156 cm (61.5") | 177 cm (69.5") |
| Antenna, stowed height<br>Antenna, deployed height | 35.1 cm (13.8")<br>142.5 cm (56.1") | 35.7 cm (14.1")<br>163.3 cm (64.3”) |

| Environmental characteristics | | |
|---|---|---|
| | EXPLORER 8100 | EXPLORER 8120 |
| Wind Speed - Operational pointing (0.2 deg. accuracy) | 20 m/s (45 mph) | 17 m/s (38 mph) |
| Wind speed - Reduced pointing accuracy (0.4 deg. accuracy) | 27 m/s (60 mph) | 23 m/s (51 mph) |

| Environmental characteristics | | |
|---|---|---|
| | EXPLORER 8100 | EXPLORER 8120 |
| Wind Speed - Deployed, survival | 33 m/s (74 mph) | 27 m/s (60 mph) |
| Wind Speed - Stowed, survival | 45 m/s (101 mph) | 42 m/s (94 mph) |
| Vehicle max. velocity[a] (stowed) | 130 km/h | |
| Temperature - Operational | -33 to +55 ˚C (-27 to +131 ˚F) | |
| Temperature - Survival | -40 to +80 ˚C (-40 to +176 ˚F) | |
| Temperature - Storage | -40 to +85 ˚C (-40 to +185 ˚F) | |
| Solar radiation | 1120W/m2 to MIL-STD-810F 505.4 | |
| IP class | IP55 dust and spray proof in all directions | |
| Ice survival | 5 mm (0.2") | |
| Humidity | 0 to 100% (condensing) | |
| Air Pressure, operational | 3 km (10000 ft.) AMSL | |
| Air Pressure, transport | 4572 m (15000 tf) AMSL, MIL-SPEC-810E 500.4 | |
| Shock (handling & transportation) | Half sine, 20g/11ms, 3 axis | |
| Rail transport (X & Y horizontal shock) | Saw tooth 50g/50ms | |

a. Note that this specification depends on a number of factors, such as mounting method, wind speed, terrain etc.

# A.3 VSAT LNB Data Sheet (physical LNB)

The following table shows the data of the LNB fitted in the ADU.

| Interface | Model | Spec. |
|---|---|---|
| Input, Ku-band | 2-band | WR75 waveguide |
| Output, IF | 2-band | F (50 Ohm) |
| LO type | 2-band | Locked to 10 MHz external reference over IF interface or ACU internal |
| LO frequencies | 2-band | 9.75, 10.75 GHz |

Table A-3: Technical specifications for VSAT LNB 1/2

| Parameter | Condition/remark | Unit | Min. | Typical | Max. |
|---|---|---|---|---|---|
| Input frequency range | VSAT | GHz | 10.7 | | 12,75 |
| Output (IF) frequency range | 2-band | MHz | 950 | | 2150 |
| VSWR | Input | - | | | 2.0 : 1 |
| | Output | - | | | 1.7 : 1 |
| Noise Figure | At 25 ˚C | dB | | 0,8 | |
| LO stability | Over temp. range | kHz | -10 | 0 | 10 |
| Gain | | dB | | 60 | |
| Gain (relative) | Over 500 MHz BW | dB | -2.0 | 0 | 2.0 |
| Gain (relative) | Over 36 MHz BW | dB | -0.5 | 0 | 0.5 |
| External ref. freq. (input) | Nominal | MHz | | 10 | |
| Power supply voltage | DC | V | 11.0 | | 19.0 |
| Supply current | DC | mA | | | 350 |
| LO selection voltage | Voltage, low (L) (input) | V | 11.0 | | 14.0 |
| | Voltage, high (H) (input) | V | 16.0 | | 19.0 |
| Temperature range (ambient) | Operation | ˚C | -30 | | 75 |
| | Storage | ˚C | -40 | | 85 |
| Dimensions (incl. connector) over all | L | mm | | | 140 |
| | W | mm | | | 58 |
| | H | mm | | | 50 |

Table A-4: Technical specifications for VSAT LNB 2/2

| Parameter | Condition/remark | Unit | Min. | Typical | Max. |
|---|---|---|---|---|---|
| Weight | Total | g | | | 350 |

Table A-4: Technical specifications for VSAT LNB 2/2 (Continued)

# A.4 VSAT 8W BUC Data Sheet (Extended)

| Interface | Model | Specification |
|---|---|---|
| Input, IF | - | N (50 Ohm) |
| Output, Ku-band | 8 W | WR75 waveguide (39.0 dBm min) |
| Spectrum | - | Non inverting |
| LO type | - | Locked to 10 MHz external reference over IF interface or ACU internal |
| LO frequency | Extended | 12.80 GHz |
| TX ON/OFF | - | 10 MHz reference ON/OFF |
| Cooling | - | External temperature controlled fan - not incl. BUC |

Table A-5: Technical specifications for VSAT 8 W BUC 1/3

| Parameter | Condition/remark | Unit | Min. | Typical | Max. |
|---|---|---|---|---|---|
| Output frequency range | VSAT Ext. TX | GHz | 13.75 | | 14.50 |
| Input (IF) frequency range | Extended | MHz | 950 | | 1700 |
| VSWR | Input (10, 950 - 1700 MHz) | - | | | 2.0 : 1 |
| | Output (13.75 - 14.50 GHz) | - | | | 2.0 : 1 |
| Output power at P1dB | Worst case | dBm | 39.0 | | |
| Output power 10 MHz ref OFF | TX band, at -35 dBm ref. | dBm | | | -60 |
| Gain (absolute linear) | Over output freq. range | dB | 61 | 65 | 69 |
| Gain (relative) | Over 500 MHz BW | dB | -2.5 | 0,0 | 2.5 |
| Gain (relative) | Over 36 MHz BW | dB | -1.0 | 0,0 | 1.0 |

Table A-6: Technical specifications for VSAT 8 W BUC 2/3

| Parameter | Condition/remark | Unit | Min. | Typical | Max. |
|---|---|---|---|---|---|
| Spurious | RX band | dBc | | | -60 |
| | TX band | dBc | | | -15 |
| Phase noise | 10 Hz | dBc/Hz | | | -50 |
| | 100 Hz | dBc/Hz | | | -60 |
| | 1 kHz | dBc/Hz | | | -70 |
| | 10 kHz | dBc/Hz | | | -80 |
| | 100 kHz | dBc/Hz | | | -90 |
| | 1 MHz | dBc/Hz | | | -110 |
| IMD3 | At 2 x +33 dBm carriers | dBc | | | -26 |
| External ref. freq. (input) | Nominal | MHz | | 10,000000 | |
| External reference freq. (input) | Deviation | Hz | -100 | 0 | 100 |
| Power supply voltage | DC | V | 20.0 | | 50.0 |
| Supply power | DC | W | | | 85 |

Table A-6: Technical specifications for VSAT 8 W BUC 2/3 (Continued)

| Parameter | Condition/remark | Unit | Min. | Typical | Max. |
|---|---|---|---|---|---|
| Temperature range | Operation w. external forced cooling | | | | |
| | | ˚C | -30 | | 75 |
| | Storage | ˚C | -40 | | 85 |
| Dimensions | L | mm | | | 176 |
| | W | mm | | | 170 |
| | H | mm | | | 102 |
| Weight | Total | g | | | 2790 |

Table A-7: Technical specifications for VSAT 8 W BUC 3/3

# A.5 VSAT 20W BUC Data Sheet (Extended)

| Interface | Model | Spec. |
|---|---|---|
| Input, IF | - | N (50 Ohm) |
| Output, Ku-band | 20 W | WR75 waveguide (43.0 dBm min. $T_{amb} \leq 55^{\circ}C$) |
| Spectrum | - | Non inverting |
| Stability | - | Stable with any passive load on input and output |
| LO type | - | Locked to 10 MHz external reference over IF interface |
| LO frequency | Extended | 12.80 GHz |
| TX ON/OFF | - | 10 MHz reference ON/OFF |
| Cooling | - | Internal temperature controlled fan (S) |
| Protection | - | TX shutdown at over-temperature not required (>70˚C ambient air) |

Table A-8: Technical specifications for VSAT 20 W BUC 1/3

| Parameter | Condition/remark | Unit | Min. | Typical | Max. |
|---|---|---|---|---|---|
| Output frequency range | VSAT Ext. TX | GHz | 13.75 | | 14.50 |
| Input (IF) frequency range | Extended | MHz | 950 | | 1700 |
| VSWR | Input (10, 950 - 1700 MHz) | - | | | 2.0 : 1 |
| | Output (13.75 - 14.50 GHz) | - | | | 2.0 : 1 |
| Output power at P1dB | Worst case, $T_{amb} \leq 55^{\circ}C$ | dBm | 43.0 | | |
| | Worst case, $T_{amb} > 55^{\circ}C$ | dBm | 42.5 | | |
| Output power 10 MHz ref OFF | TX band, at -35 dBm ref. | dBm | | | -60 |
| Gain (absolute linear) | Over output freq. range, Min. | dB | 64 | 68 | |
| | Over output freq. range, Max. | dB | | 68 | 72 |
| Gain (relative) | Over 500 MHz BW | dB | -2.5 | 0,0 | 2.5 |
| Gain (relative) | Over 36 MHz BW | dB | -1.0 | 0,0 | 1.0 |

Table A-9: Technical specifications for VSAT 20 W BUC 2/3

| Parameter | Condition/remark | Unit | Min. | Typical | Max. |
|---|---|---|---|---|---|
| Spurious/harmonics out | RX band 10.70 - 12.75 GHz | dBm | | | -56 |
| | 13.50 - 13.75 GHz band | dBm | | | -15 |
| | TX band 13.75 - 14.50 GHz | dBm | | | -15 |
| | 14.50 - 14.80 GHz band | dBm | | | -17 |
| | Carrier ±10 MHz to 9.99 MHz | dBm | | | -30 |
| | Carrier ±10 MHz to 50 MHz | dBm | | | -30 |
| | Out of band[a] 1) | dBm | | | -26 |
| ACPR at Pout 43.0 dBm, 5 Msym/s | 8PSK, $\alpha$=0.2, $\Delta$f=6Mz, $\leq$ 55˚C | dBc | | | -24 |
| | 8PSK, $\alpha$=0.2, $\Delta$f=6Mz, < 55˚C | dBc | | | -24 |
| External ref. freq. (input) | Nominal | MHz | | 10 | |
| External reference freq. (input) | Deviation | Hz | -100 | 0 | 100 |
| LO phase noise (output), SSB | 10 Hz | dBc/Hz | | | -50 |
| | 100 Hz | dBc/Hz | | | -60 |
| | 1 kHz | dBc/Hz | | | -70 |
| | 10 kHz | dBc/Hz | | | -80 |
| | 199 kHz | dBc/Hz | | | -90 |
| | ≥1 MHz | dBc/Hz | | | -110 |

Table A-9: Technical specifications for VSAT 20 W BUC 2/3 (Continued)

a. 0.10 - 10.70 GHz & 12.75 - 13.50 GHz & 14.80 - 26.00 GHz

| Parameter | Condition/remark | Unit | Min. | Typical | Max. |
|---|---|---|---|---|---|
| Power supply voltage | DC | V | 39.0 | | 50 |
| Supply power | DC | W | | | 185 |
| Temperature range | Operation w. internal forced cooling (no sun) | ˚C | -30 | | +70 |
| | Storage | ˚C | -40 | | 85 |

Table A-10: Technical specifications for VSAT 20 W BUC 3/3

| Parameter | Condition/remark | Unit | Min. | Typical | Max. |
|---|---|---|---|---|---|
| Dimensions (incl. connector) overall, fan included (waveguide port on WxH side) | L | mm | | | 190 |
| | W | mm | | | 125 |
| | H | mm | | | 110 |
| Weight, fan included | Total | g | 2500 | | 2900 |

Table A-10: Technical specifications for VSAT 20 W BUC 3/3 (Continued)

## A.6 ViaSat eTRIA

| Parameter | Receive | Transmit |
|---|---|---|
| Frequency range | 19.7 to 20.2 GHz | 29.5 to 30.0 GHz |
| HPA output power P1dB | N/A | 35 dBm |
| LNA noise figure | 1.2 dB | N/A |
| Small signal gain | 55 dB | 56 dB |
| SSB phase noise at 10 kHz offset | -87 dBc/Hz | -83 dBc/Hz |
| Transmit IF | Port 1: 33 to 800 MHz<br>Port 2: 1,000 to 1,500 MHz | 1,800 to 2,300 MHz |
| Voltage (IF port) | 24 to 57 VDC | |
| DC power consumption (at P1dB) | Typ: 44 W, Max: 52 W | |
| Operating temperature | -40 to +55 degrees Celsius | |
| Humidity (Condensing) | 0 to 100% | |
| Weight | 3.1 kg | |
| RF transmit output interface | N/A | RF transmit output interface |
| RF receive input interface | Feed horn matched to antenna reflector | N/A |
| IF connector(s) | Type “F” | |
| Dimensions (L x W x H incl. heatsink) | 321 x 142 x 77 mm | |
| Reliability MTBF (at 30 degrees Celsius ambient) | >100,000 hr | |

Table A-11: Technical specifications for ViaSat eTRIA

# A.7 Antenna dimensions

## A.7.1 EXPLORER 8100

The dimensions shown here are in millimeters, with inches shown in brackets.

### Side view (stowed)

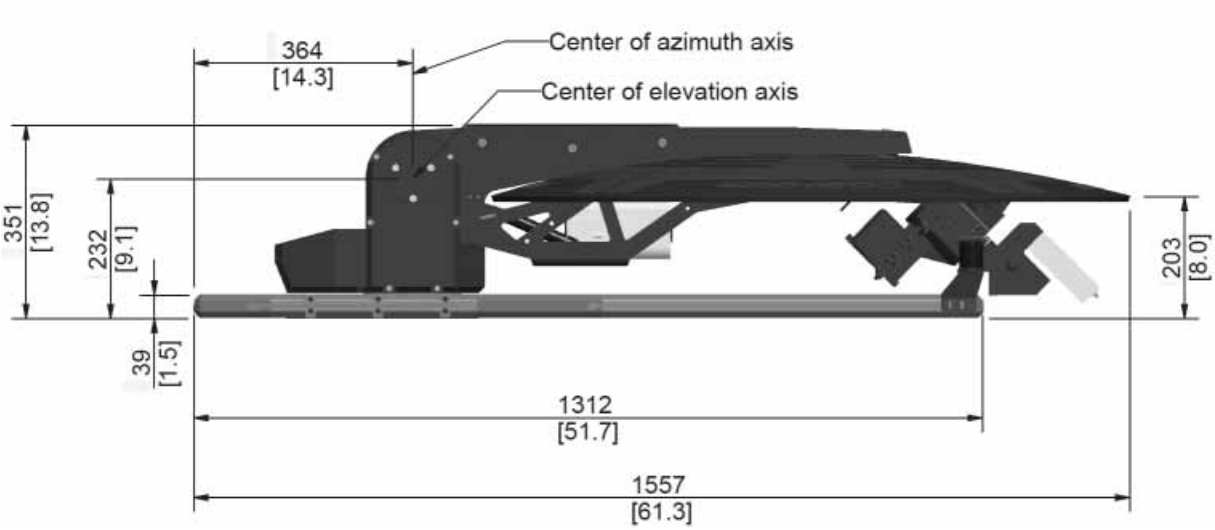


Figure A-1: EXPLORER 8100 antenna: Side view (stowed)

### Top view (stowed)

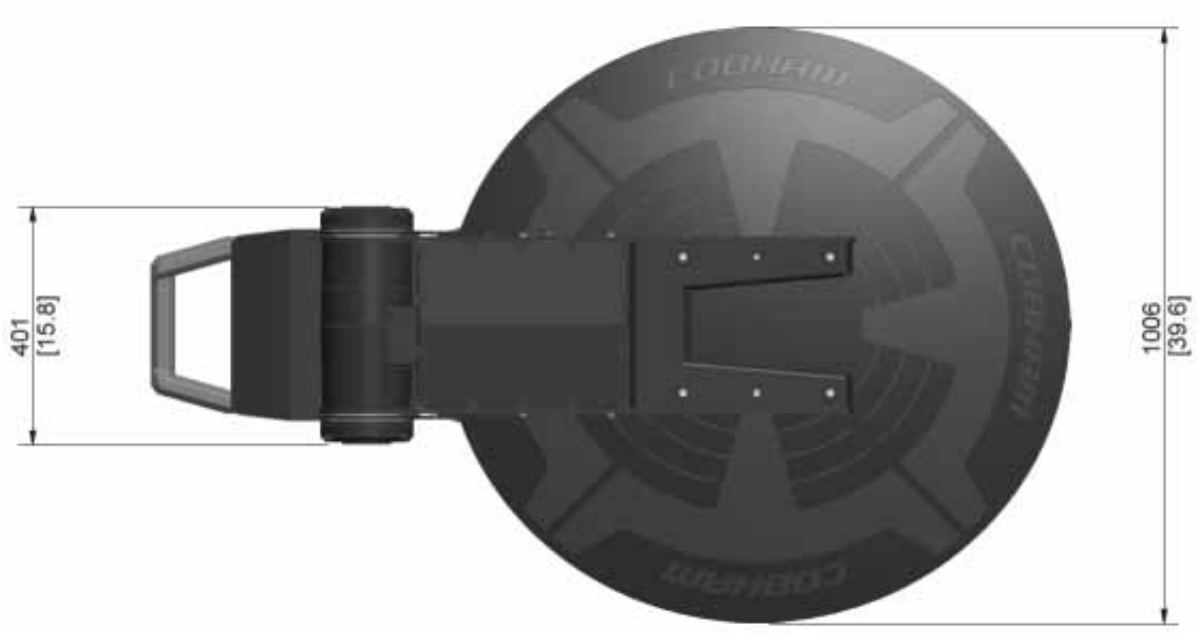


Figure A-2: EXPLORER 8100 antenna: Top view (stowed)

## Side view (deployed)

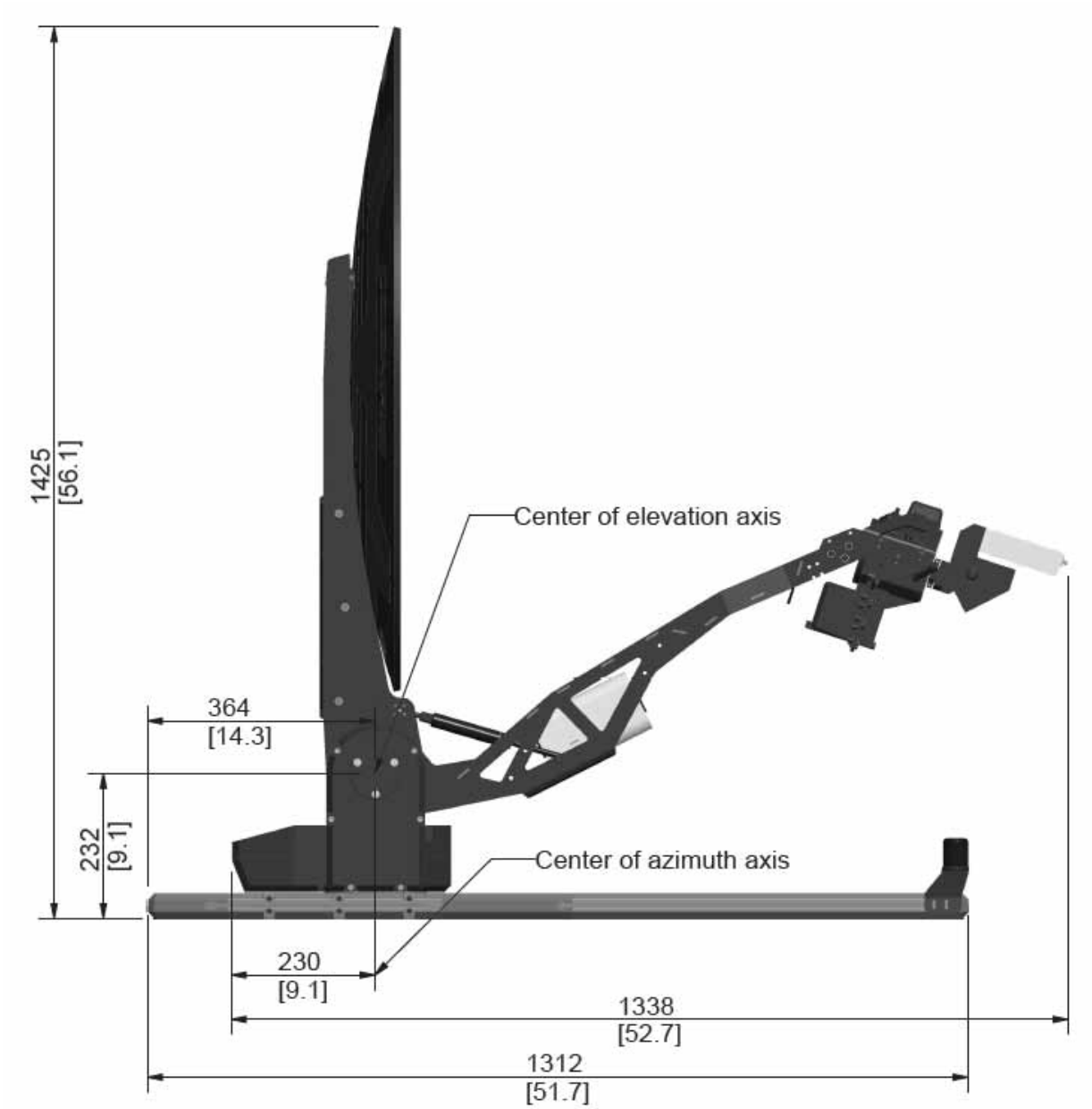


Figure A-3: EXPLORER 8100 antenna: Side view (deployed)

## Measures for antenna installation

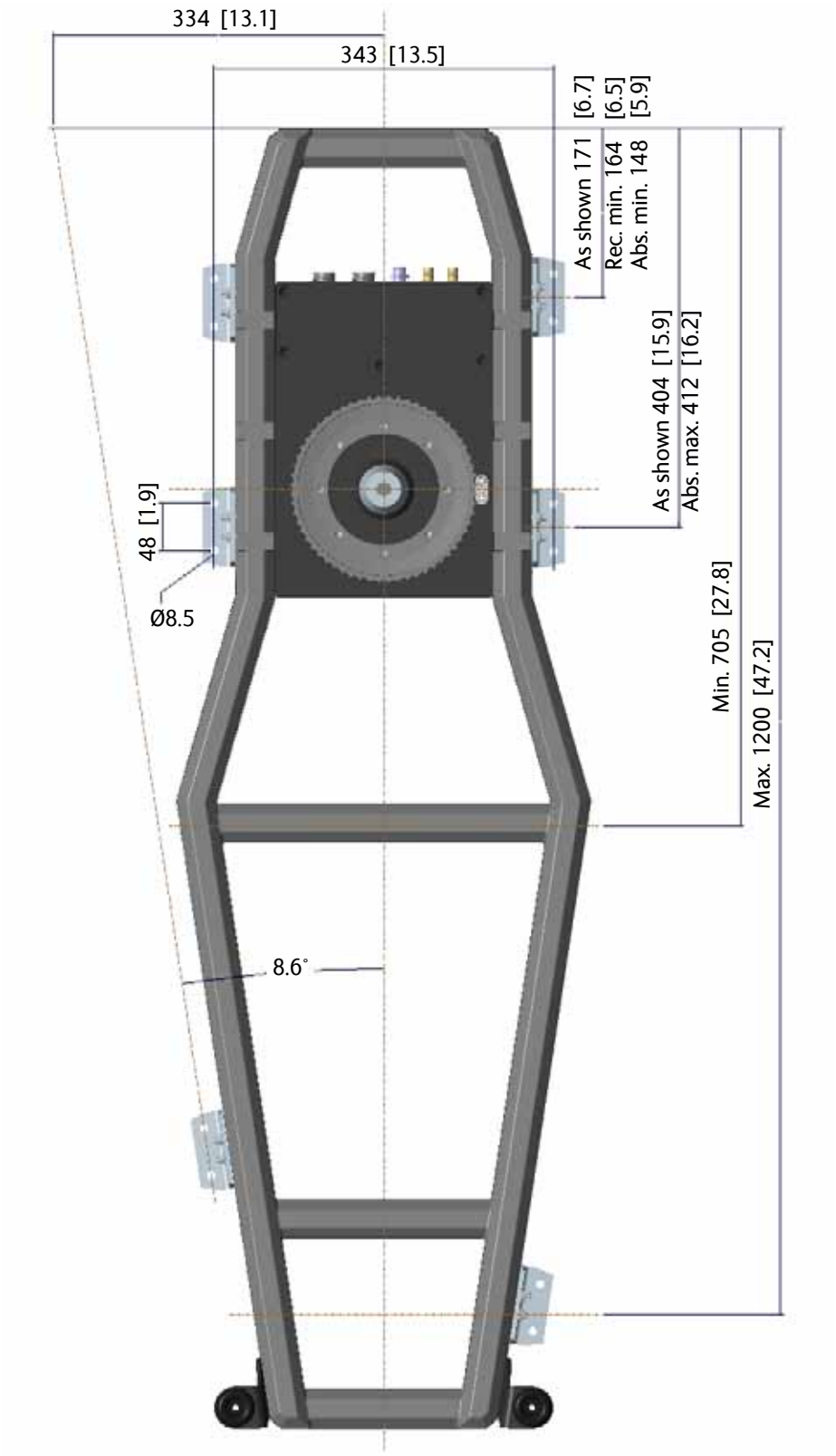


Figure A-4: EXPLORER 8100 antenna: measures for antenna installation

## A.7.2 EXPLORER 8120

The dimensions shown here are in millimeters, with inches shown in brackets.

### Side view (stowed)

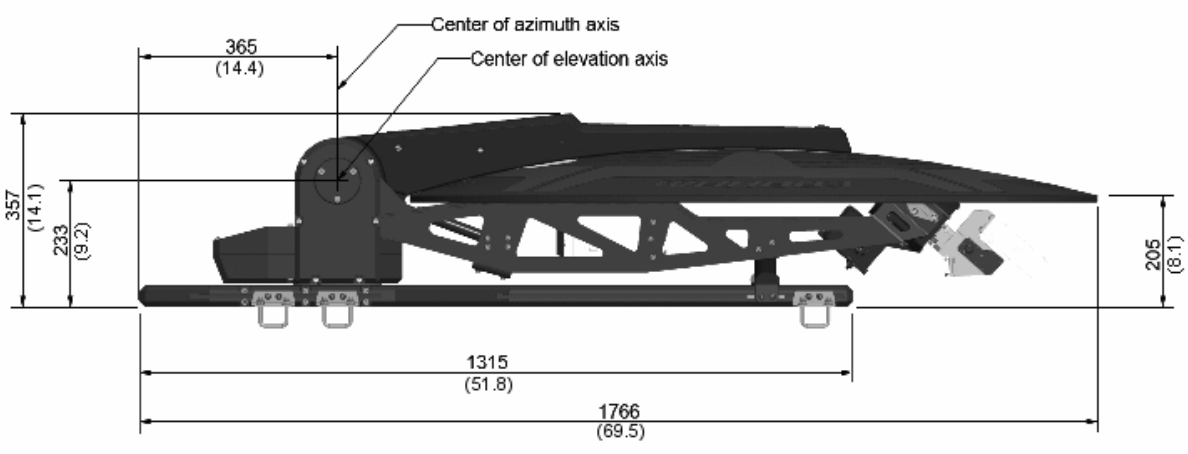


Figure A-5: EXPLORER 8120 antenna: Side view (stowed)

### Top view (stowed)

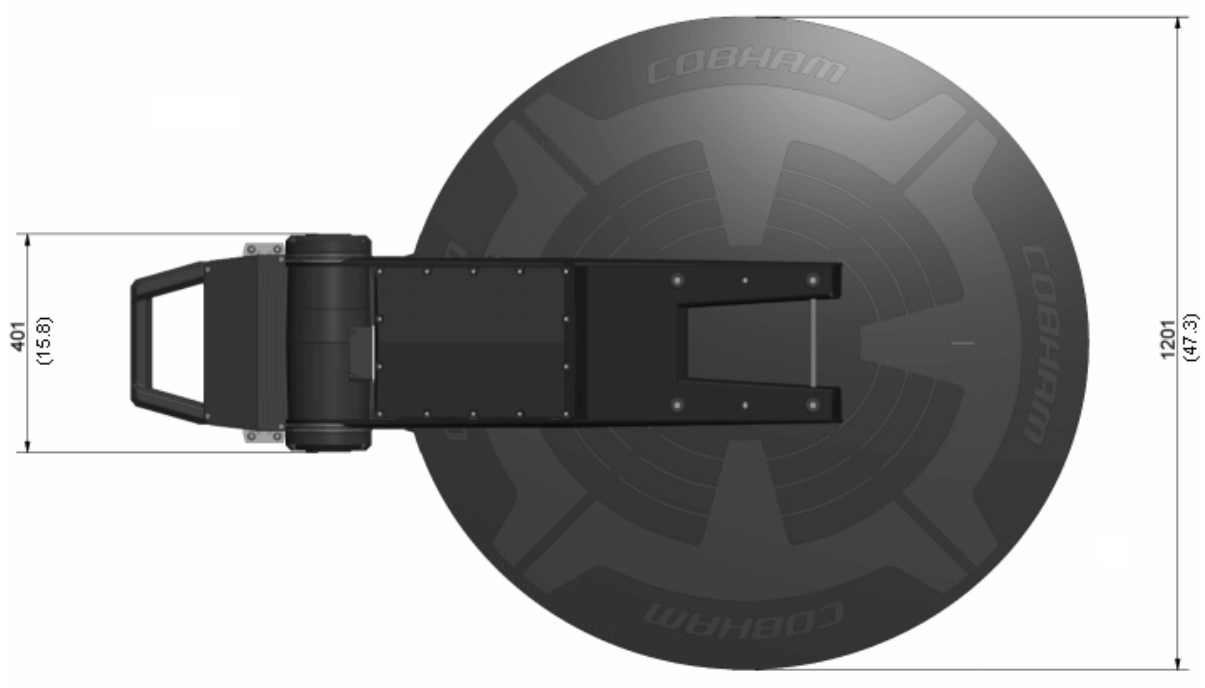


Figure A-6: EXPLORER 8120 antenna: Top view (stowed)

## Side view (deployed)

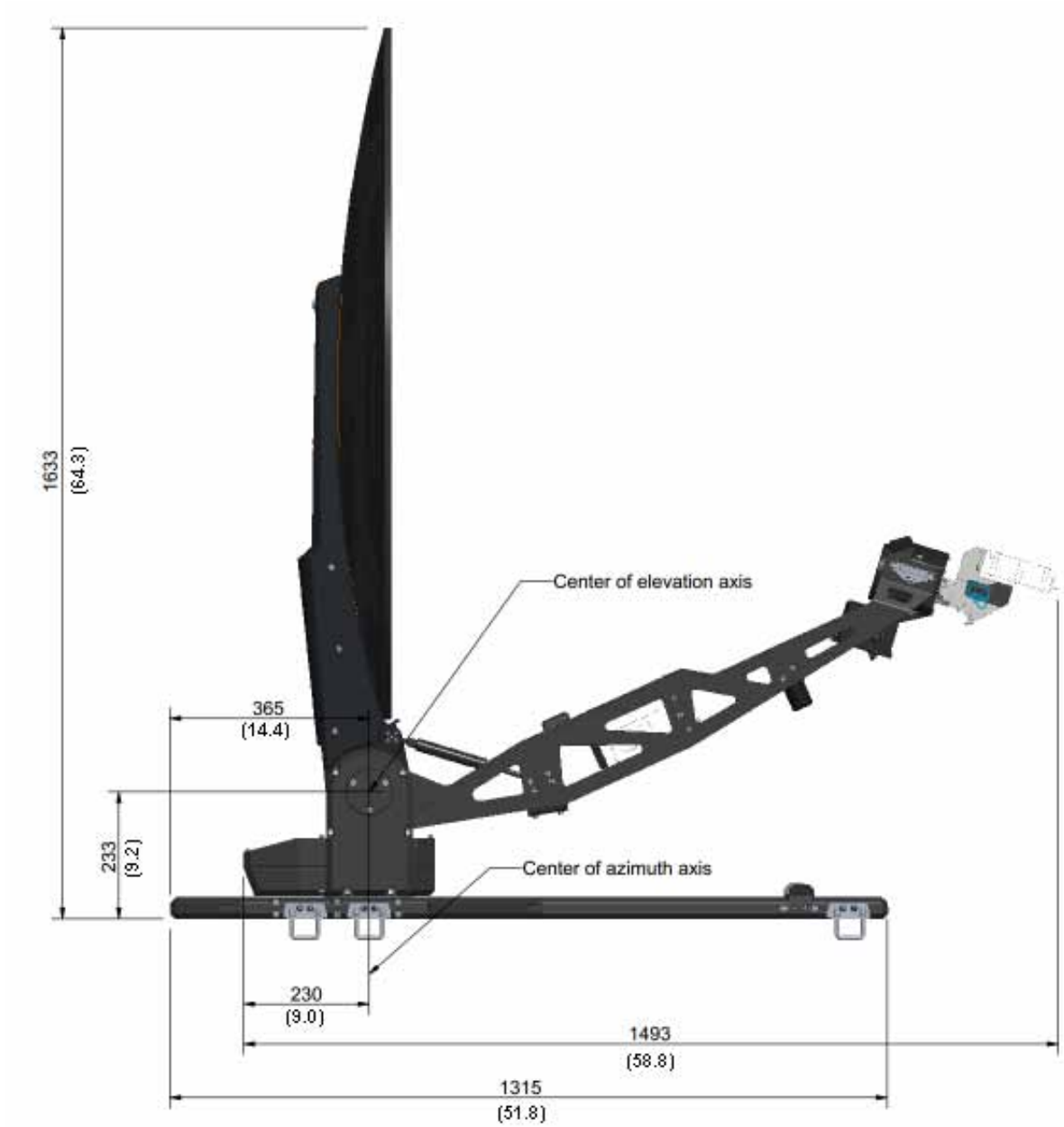


Figure A-7: EXPLORER 8120 antenna: Side view (deployed)

## Measures for antenna installation

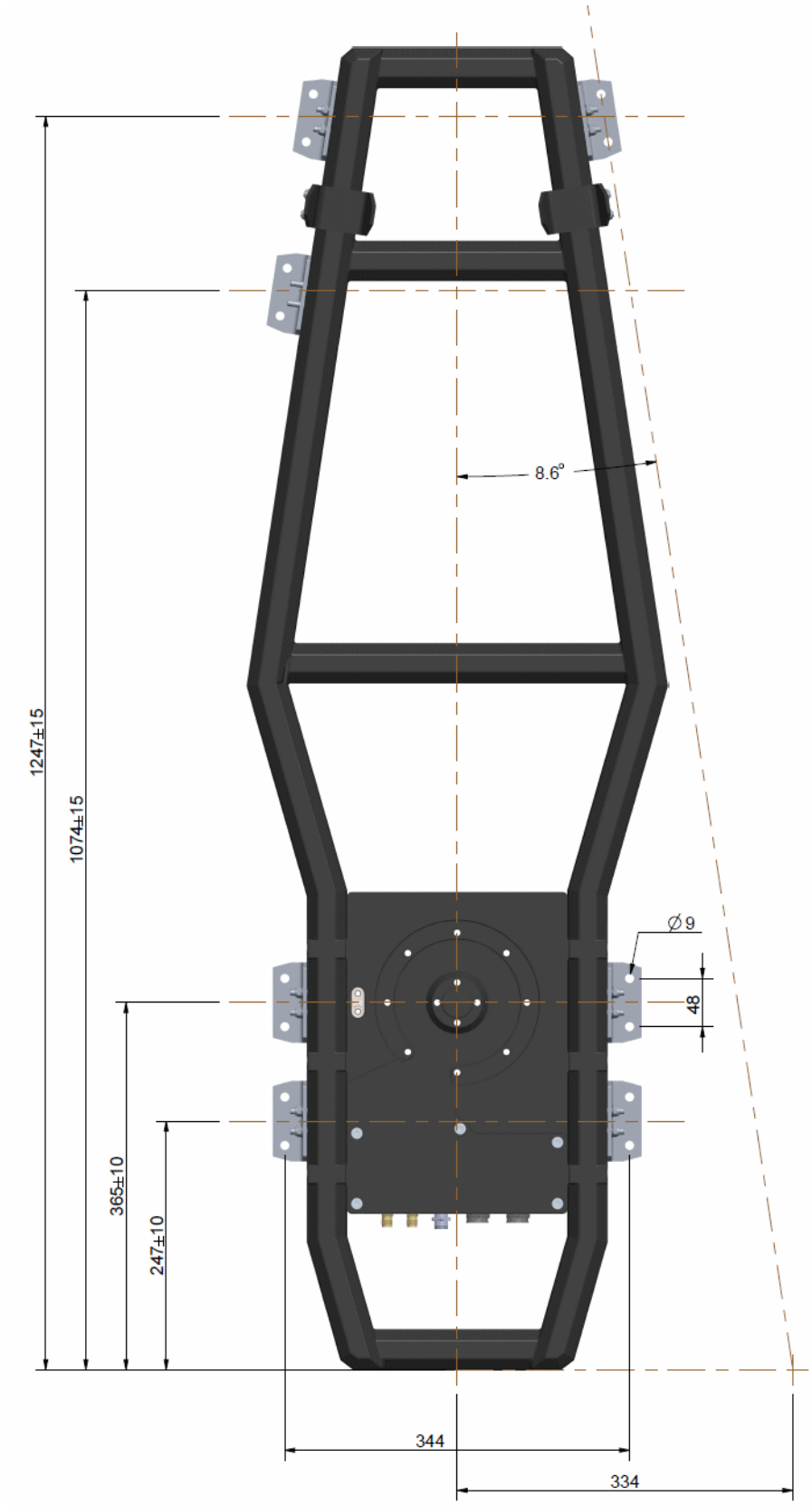


Figure A-8: EXPLORER 8120 antenna: measures for antenna installation

# A.8 ACU specifications

| Item | Specification |
|---|---|
| Dimensions, rack mount<br>H x W x D | 1 U, 19 inch<br>43.7 x 482.6 x 475.6 mm (1.72 x 19.0 x 18.7 inches) |
| Weight | 4.3 kg (9.5 lbs) |
| Ambient temperature | Operational: -25˚C to +55˚C<br>Survival: -40˚C to +80˚C<br>Storage: -40˚C to +85˚C |
| Humidity | 95% (non-condensing) |
| IP class | IP20 |
| Interfaces | 1 x RX Out (to modem RX in)<br>1 x TX In (from modem TX out)<br>1 x LNB RX (from **LNB RX** on antenna)<br>1 x BUC TX (to **BUC TX** on antenna)<br>1 x ODU Power & Comm. (to **ODU Power & Comm.** on antenna)<br>1 x BUC Power & Comm. (to **BUC Power & Comm.** on antenna)<br>1 x ODU Comm. (to **ODU Comm.** on antenna)<br>5 x Ethernet, RJ45<br>1 x WLAN<br>1 x RS-232<br>1 x RS-422<br>1 x AC power input<br>1 x Ground stud |
| Input power | See *System power supply range (input via ACU)* and *Total system power consumption* on page A-1. |
| Display and controls | OLED display, 5 push buttons,<br>3 discrete indicator LEDs and ON/OFF switch |

Table A-12: Technical specifications for the ACU

# A.9 ACU dimensions

The dimensions shown here are in millimeters, with inches shown in brackets.

## A.9.1 ACU front and top

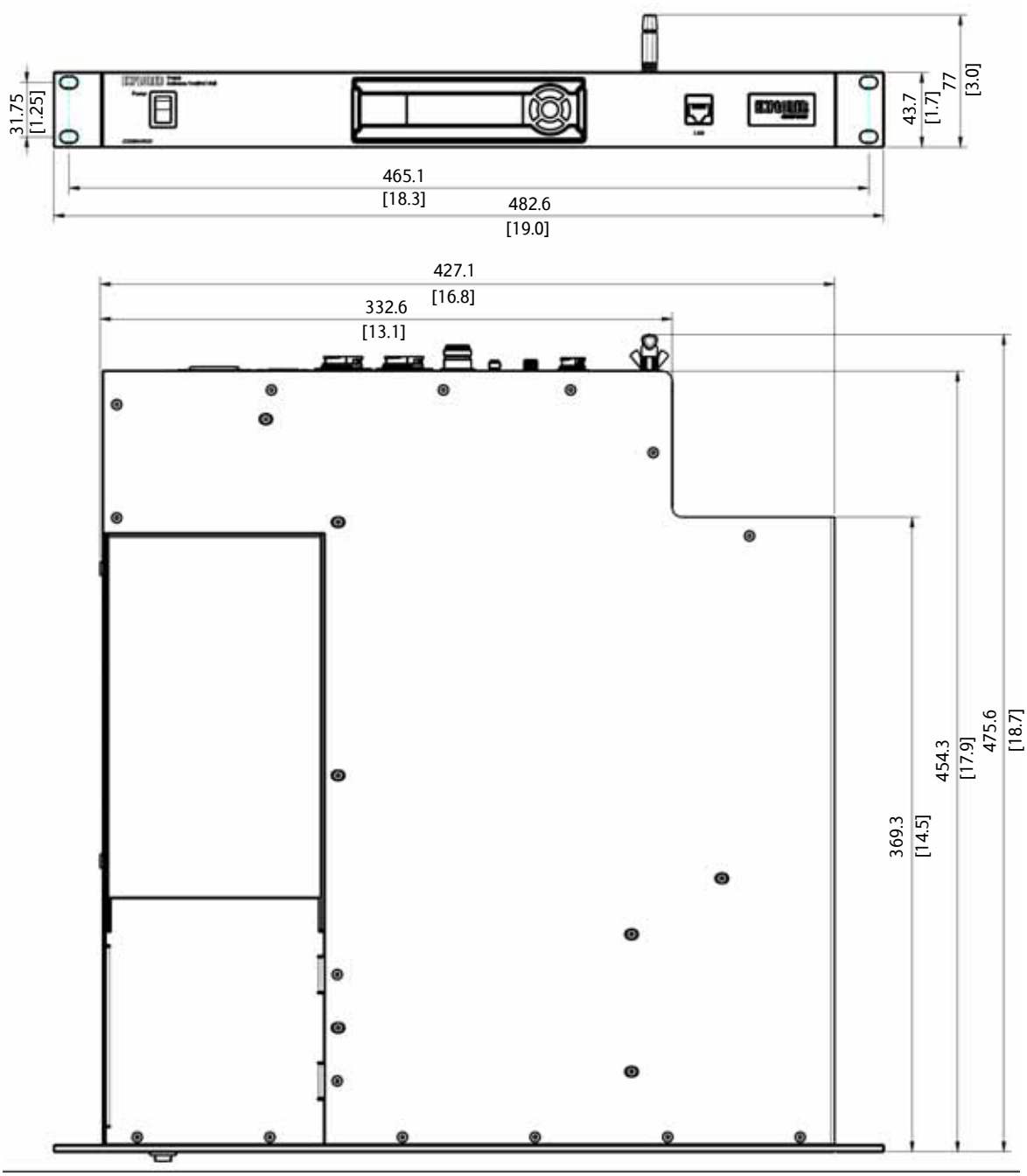


Figure A-9: ACU dimensions, front and top

## A.9.2 ACU left and right side

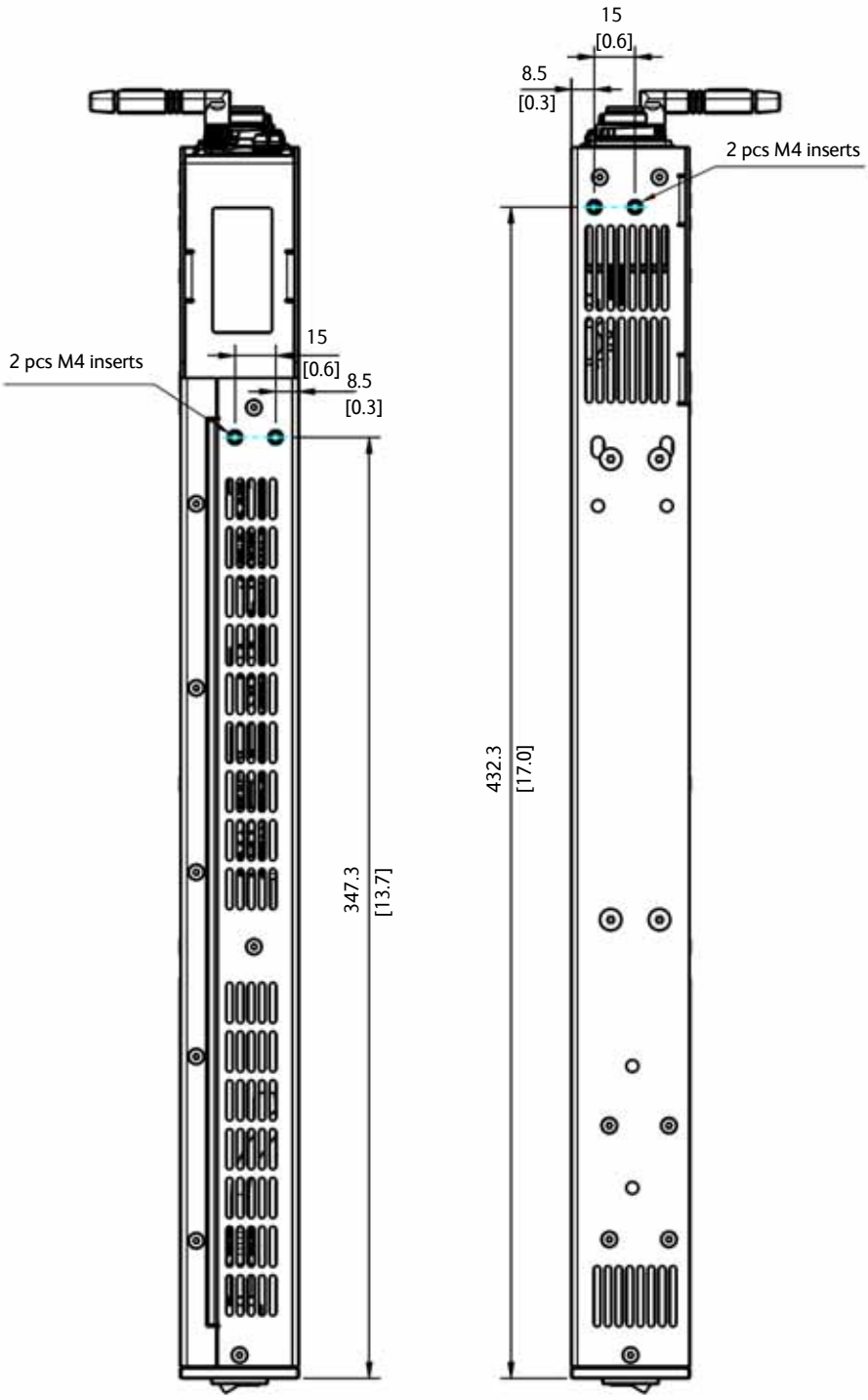


Figure A-10: ACU dimensions, left and right side

# VSAT modem cables

This appendix contains cable specifications for cables between the ACU and a VSAT modem.

- *Modem Cable COMTECH Serial & RSSI TT7016A*
- *iDirect & SkyEdge II VSAT modem serial cable*

# B.1 Modem Cable COMTECH Serial & RSSI TT7016A

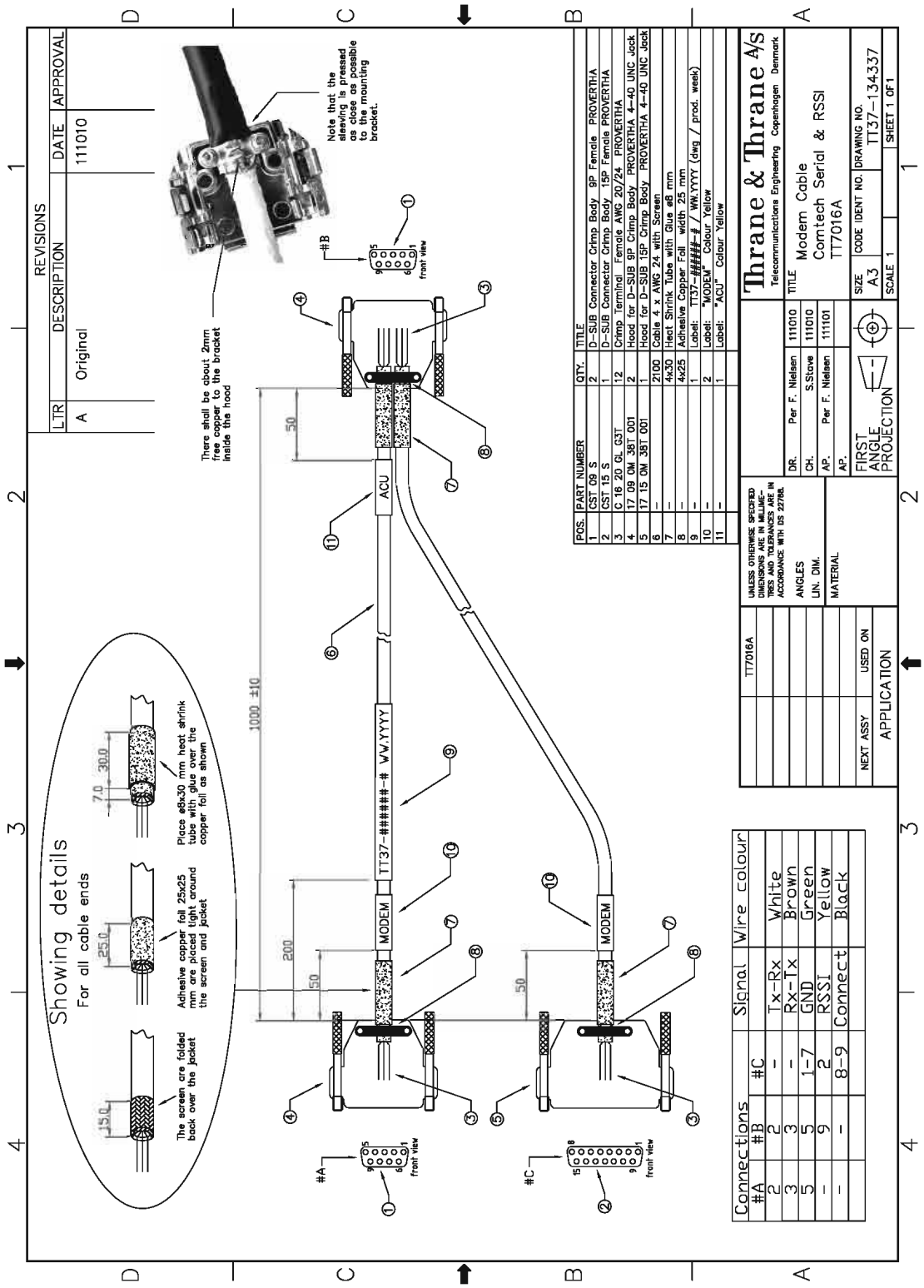


Figure B-1: Modem Cable COMTECH Serial & RSSI TT7016A

# B.2 iDirect & SkyEdge II VSAT modem serial cable

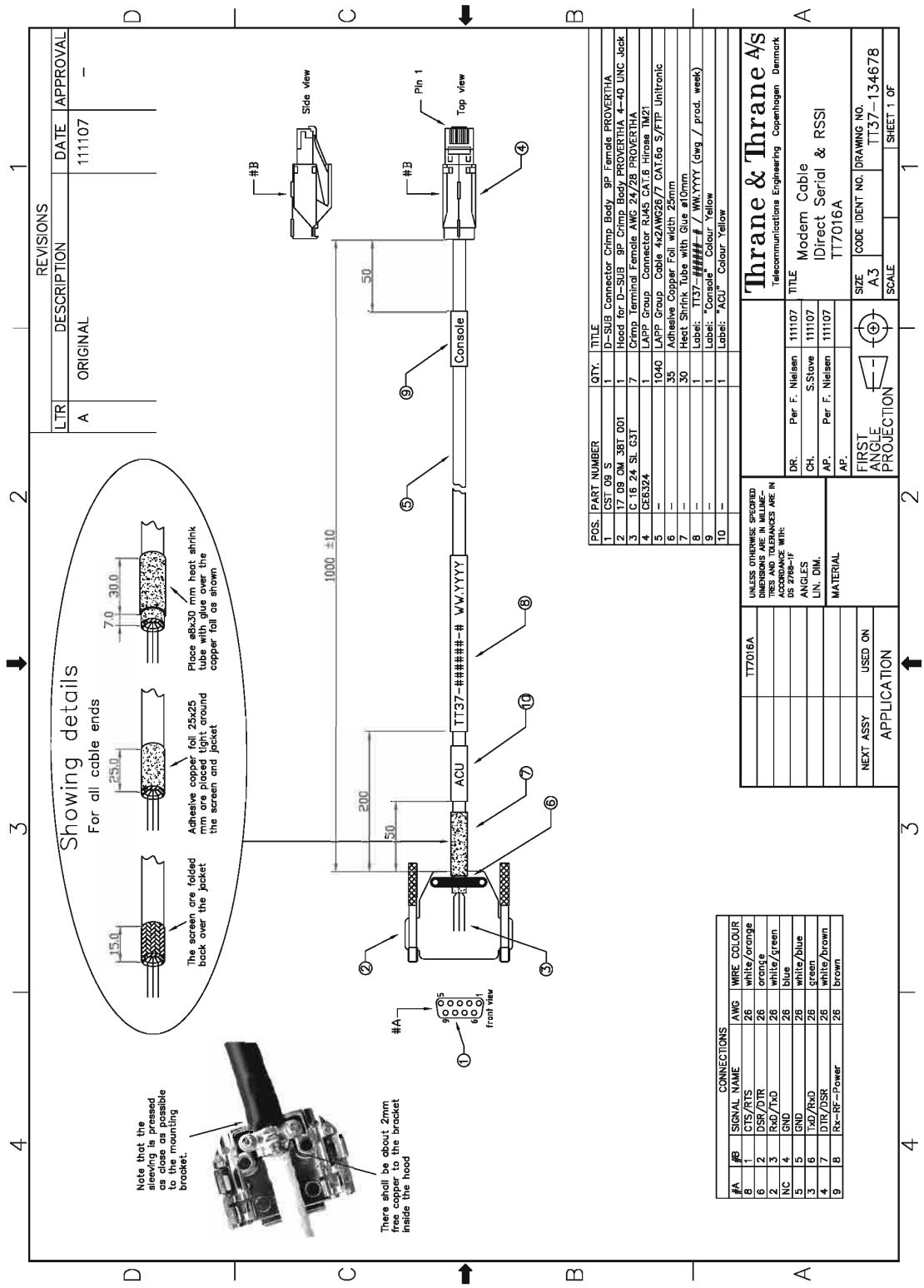


Figure B-2: Modem Cable iNFINITI iDirect VSAT modem

# VSAT modem settings

In this appendix you find detailed information on how to set up supported VSAT modems.

**Important**

The information in this appendix may not be up to date. The VSAT modems are 3rd party products in relation to Cobham SATCOM, and Cobham SATCOM has no influence on the functionality of these products.

The following information is only a guideline based on the functionality of the modems at the time of writing.

The appendix has the following sections:

- *OpenAMIP setup for iDirect iNFINITI & Evolution*
- *OpenAMIP setup for Generic OpenAMIP VSAT modems*
- *Serial setup for iDirect iNFINITI & Evolution*
- *COMTECH 570L*
- *STM SatLink 2900 VSAT modem*
- *Gilat SkyEdge II VSAT modem*

# C.1 OpenAMIP setup for iDirect iNFINITI & Evolution

## C.1.1 Protocol and interfaces

### Introduction

The following sections describe the protocol and interface between the ACU and an iDirect OpenAMIP VSAT modem. OpenAMIP operation is normally used by service providers offering global VSAT service because the protocol supports roaming between satellites (Automatic Beam Switching).

OpenAMIP, an ASCII message based protocol invented and Trademarked by iDirect is a specification for the interchange of information between an antenna controller (ACU) and a VSAT modem. This protocol allows the VSAT modem to command the ACU to search and lock to a particular satellite as well as allowing exchange of information necessary to permit the VSAT modem to initiate and maintain communication via the antenna and the satellite. In general, OpenAMIP is not intended for any purpose except to permit a modem and the ACU to perform synchronized automatic beam switching.

### Connections

Connect the ACU and iDirect modem with the following cables:

- Ethernet cable for TCP/IP data communication
- RS-232 console cable for signal strength indication (part number: 407090A-020)

  **Important** It is important to connect this cable to achieve satisfactory acquisition of the satellite. This is due to missing information in the iDirect OpenAMIP software before version 3.1.1.2/13.0.1.2. RSSI information on the dashboard will only be available with this cable connected.

- 75 Ohm RF cables F-F connectors for rx and tx frequencies.

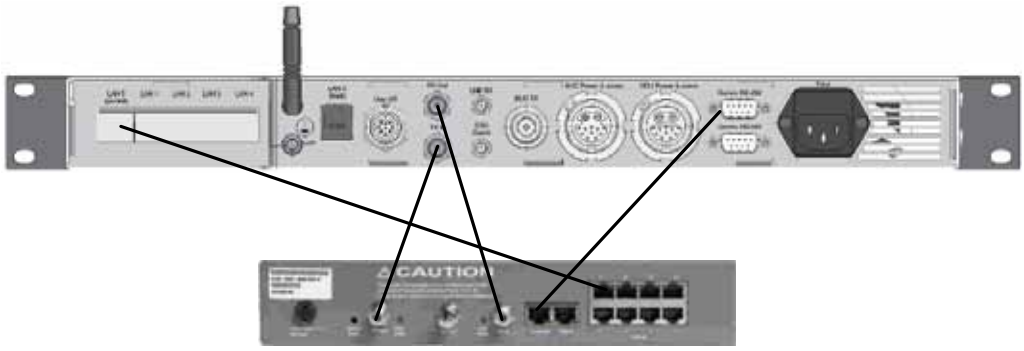


Figure C-1: Connecting iDirect iNFINITI 5000 series to the ACU (OpenAMIP)

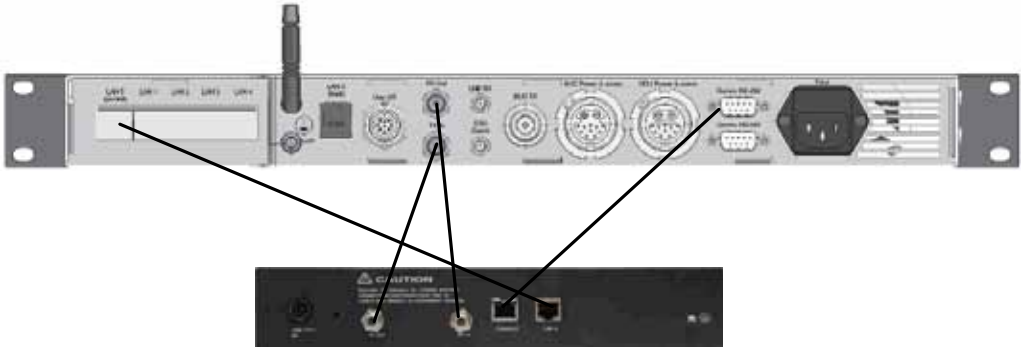

Figure C-2: Connecting iDirect Evolution X5 to the ACU (OpenAMIP)

The pin allocation for the RS-232 Console cable is shown below. See also Appendix B on page B-1 for a cable drawing.

| Console port (DTE) | RJ-45 pin | Color code | RJ-45 to DB-9 adapter pin | Console device |
|---|---|---|---|---|
| RTS | 1 | Blue | 8 | CTS |
| DTR | 2 | Orange | 6 | DSR |
| TxD | 3 | Black | 2 | RxD |
| GND | 4 | Red | NC | GND |
| GND | 5 | Green | 5 | GND |
| RxD | 6 | Yellow | 3 | TxD |
| DSC | 7 | Brown | 4 | DTR |
| Rx-RF Power | 8 | White/Grey | 9 | -- |

Table C-1: RS-232 Console cable for iDirect VSAT modem

## Protocol

The ACU supports all OpenAMIP commands except the X command which is optional. All the supported OpenAMIP commands are shown in the following figure.

| | Messages Sent from Remote | | | | Messages Sent from Antenna | |
|---|---|---|---|---|---|---|
| iDS/iDX Release | Message | # Para-meters | Mapped to Options File Keys | Options File Group | Message | # Para-meters |
| iDX 2.0.x | A | | keepalive_interval<br>Default value of 15 seconds. Will not appear in Options file unless overwritten. | [ANTENNA] | a | |
| | B | 2 | rx_lcl_osc, tx_lcl_osc | [SATELLITE] | | |
| | H | 2 | hunt_frequency, hunt_bandwidth | [SATELLITE] | | |
| | K | 1 | max_skew<br>Maximum skew of the beam short axis to the geosynchronous arc. | [SATELLITE] | | |
| | P | 2 | polarity, tx_polarity | [SATELLITE] | | |
| | S | 3 | longitude, max_lat, pol_skew | [SATELLITE] | s | 2 |
| | T | 2 | tx_frequency, tx_bandwidth | [SATELLITE] | | |
| | W | 1 | latlong_interval<br>Message contains single value in seconds. Does not generate Options file key. | [MOBILE] | w | 4 |

Figure C-3: Supported OpenAMIP commands

| Messages sent from VSAT modem | Explanation |
|---|---|
| S -15.000000 0.000000 0.000000 | Longitude, Max_lat, Pol_skew |
| H 1451.815000 1.905000 | Hunt_frequency, Hunt_bandwidth |
| P H V | Rx_polarity, Tx_polarity |
| B 11250.000000 12800.00000 | Rx-lcl_osc, Tx_lcl_osc |
| T 1403.290000 0.618000 | Tx_frequency, Tx_bandwidth |
| A 15 | Keepalive_interval in mS [ACU: s message] |
| W 300 | latlong_interval in seconds [ACU: w message] |
| L 1 1 | Rx lock, Tx allowed |
| K 90.000000 | Max_skew |

Table C-2: Messages sent from the VSAT modem to the ACU (examples)

| Messages sent from the ACU to the VSAT modem | Explanation |
|---|---|
| s 1 1 | Functional, Tx OK |
| w 1 55.794010 12.52272 985523005 | GPS valid, Latitude, Longitude, Time |

Table C-3: Messages sent from the ACU to the VSAT modem (examples)

**Note** The iDirect modems only sends the satellite information once when booting. If the ACU has not received the information for some reason, the system cannot point. In that case the modem will automatically boot after 5 minutes and send the satellite information again.

The signal strength from the modem is measured on RS-232 pin 9. It is a DC voltage in the range of 0 - 5 VDC.

| Ranges for signal strength | |
|---|---|
| VDC | Antenna status |
| 0-2.5 | RF energy is detected, but from a wrong or unidentified satellite. |
| 2.6-5.0 | Carrier lock, correct satellite. |

Table C-4: Ranges for signal strength for iDirect OpenAMIP VSAT modem

The signal strength is displayed in the web interface on the Dashboard as 0 – 500. The minimum value for an Internet connection is 250 - 260.

## C.1.2 Sample options file

The following section presents a sample iDirect OpenAMIP Options File. The highlighted parameters in bold are important and needed for the VSAT system to function correctly.

See comments in brackets for explanation of the use.

```
[ANTENNA]
  addr = 10.1.6.2
    (ACU LAN1 IP setting)
  connect_timeout = 30
  dedicated_interface = ixp0
  manufacturer = OpenAMIP
  max_skew = 90.000000
  model = OpenAMIP
  port = 2000
    (ACU Modem Profile setting)
```

```
[BEAMS]
  beam_88 = E36B
  maxbeam = 88
[BEAMS_LOCAL]
  inhibit_tx_ifzero = 0
[BTP]
  device_mode = tdma
  device_name = btp
  device_path = /dev
[BTP_REQ]
  device_mode = tdma
  device_name = btp_req
  device_path = /dev
[COMPRESSION]
  Threshold = 90
[DEBUG]
  cpu_util_test_enabled = 0
[DVBS2]
  frame_length = 125.000000
  frame_size = short
  mode = acm
  ncr_interval = 3375000
  pilot = 1
  rc_roll_off = 0.200000
[ENC]
  auth_level_required = 0
  enc_enabled = 0
  enc_layer_enabled = 0
  enc_mode = 0
  peer_mode = 1
[ETH0]
  interface = ixp0
  phy_count = 1
[ETH0_1]
  address = 10.1.6.1
  netmask = 255.255.255.128
    (ACU LAN1 subnet setting)
  rip_enabled = 0
  web_server_enabled = 0
```

```
[FREQ_TRANS]
  down_translation = 11300.000000
  up_translation = 12800.000000
    (BUC LO)
[GUI_SERVER_PROXY]
  port = 14599
[LAN]
  lan_gw_ip = 0.0.0.0
  lan_ip = 10.1.6.1
  lan_subnet_ip = 255.255.255.128
[MAPSERVER_0]
  hostname = 172.28.1.11
  port = 5003
[MOBILE]
  gps_input = 2
    (2 => GPS via OpenAMIP)
  gps_validation_active = 1
  init_tx_power_offset = 0.000000
  is_mobile = 1
  latlong_acq_interval = 300
  latlong_fail_interval = 10
  latlong_interval = 300
  tx_handshake_enabled = 0
    (BUC mute/unmute is handled by the VSAT terminal!)
[MODEM_INSTALLATION]
  reflector_offset_angle = 0.000000
  remote_lat = 35.890000
  remote_long = 14.480000
  spacecraft_long = 35.900000
[MODEM_PARAMETERS]
  ref_carrier_fec_block_size = 100
  ref_carrier_modcod_coding_rate = 2
  ref_carrier_modcod_modulation = 1
  ref_carrier_symbol_rate = 360000.000000
  rx_acqrange = 100000
  rx_diff = 0
  rx_freq = 1263381999
  rx_mode = 2
  rx_only = 0
  rx_scram = 1
  rx_specinv = 0
  rx_symrate = 2778000.000000
  tx_bitrate = 1
```

```
  tx_power_in_dbm = -32.000000
  tx_specinv = 0
[NET_ENC]
  id = 10
  is_encrypted = 0
[NMS]
  broadcast_ip = 172.28.1.11
  download_monitor_credentials = 1
  download_monitor_group = 239.192.0.0
  download_monitor_port = 9000
  event_server_ip = 172.28.1.11
  event_server_port = 2860
  generated_by = NMS-14.0.2
  is_nms_managed = 1
  keep_alive_port_number = 2860
  NRD_remote_status_port_number = 2859
  NRD_server_ip = 172.28.1.11
  server_ip = 172.28.1.11
  service_monitor_interval = 1000
  timeout = 20000
[ODU]
  lnb_dc_voltage = 18
  lnb_tone_enable = 0
  music_present = 0
  odu_disable_tx_pwm = 0
  odu_rx_10_mhz = 0
  odu_rx_dc_power = 1
  odu_tx_10_mhz = 1
    (10 MHz Reference to enable BUC unmute)
  odu_tx_dc_power = 1
[OOB]
  mem_high_percent = 90
  mem_low_percent = 75
[OPTIONS_FILE]
  carrier_type = 0
  code_version = 14.0.2.7
  did = 117491203
  disable_options_flash_command = 0
  generated_by = NMS-14.0.2
  is_mesh = 0
  mobile_remote_type = 1
  modem_hardware = X5
  modem_sn = 123456
  modem_type = Remote
```

```
  product_mode = dvbs2
  upstream_product_mode = idirect_tdma
[POWER_MANAGEMENT]
  enable = 0
  sleep_timeout = 0
[ROUTE_1_0]
  gateway = 0.0.0.0
  interface = sat0
  metric = 1
  netmask = 0.0.0.0
  network = 0.0.0.0
[RX1]
  device_mode = scpc
  device_name = rx1
  device_path = /dev
[SAT0_1]
  address = 10.0.0.13
  netmask = 255.255.240.0
  rip_enabled = 0
  web_server_enabled = 0
[SATELLITE]
  channelname = E36B
  hunt_bandwidth = 0.000000
  hunt_frequency = 1233.660000
  longitude = 35.900000
  max_lat = 0.000000
  max_skew = 90.000000
  min_look_angle = 0.000000
  name = E36B
  noise_reference_frequency = 0.000000
  pol_skew = 0.000000
  polarity = V
  rx_lcl_osc = 11300.000000
  skew_margin = 90.000000
  tx_bandwidth = 0.000000
  tx_frequency = 1234.560000
    (Correct tx freq. ensures same P1dB @ all frequencies!)
  tx_lcl_osc = 12800.000000
    (BUC LO)
  tx_polarity = X
```

```
[SECURITY]
  admin_password =
  $idi3$0oAshW$01pJQAAWxgQxLnasMrdrUygxRQ8UHrLjCWW8AwRJuYd1
  JvhpLjZ3QZZNufOT46pY.bzzsX0VH0jaaXcdGDEVsS
  os_password = $1$/K.qAA$oBJORr9q34ycG7juIu60I.
  password =
  $idi3$/B2K3p$.gpGIC9BkGi/lPPh0b90OfwvFmSmEVFTyWKhqa3X.w9h
  Q2oDeXpsYt3qCmJO1H7B.oYElSxyF0ja0AiKStaxTV
[SOF]
  device_mode = tdma
  device_name = sof
  device_path = /dev
[SYSTEM_TRAY]
  interval = 5000
  mode = 1
  port = 2859
  server = 172.28.1.11
  service_monitor_group = 239.255.255.1
  service_monitor_port = 9001
[TDMA]
  tx_watchdog_timeout_in_frames = 2
[TX]
  device_mode = tdma
  device_name = tx
  device_path = /dev
[TX_SOF]
  device_mode = tdma
  device_name = tx_sof
  device_path = /dev
[UCP]
  max_power_level_in_db = -25.000000
  power_uplink_control_processing = 1
[UDP]
  force_rtp_fullheader = 1
  force_udp_fullheader = 1
  max_hdr_comp_packet_size = 180
  passthru = 1
  payload_comp = 0
[VLAN]
  mode = 0
  vid = 1
```

The option file must use the following information:

| Section in the option file | Requirements |
|---|---|
| [SATELLITE] | The modem provides RX and TX frequency information via a data connection to the VSAT system.<br>The VSAT system has an extended 8 Watt BUC with LO up conversion frequency of 12.8 GHz.<br>— Example: “tx_lcl_osc = 12800.000000” |
| [MOBILE] | The iDirect modem must be set to mobile unit and receive the GPS information from the ACU with the command “w <Valid> <Lat> <Lon> <Time>”.<br>**Example**: “is_mobile = 1”<br>Tx handshake must not be enabled in the iDirect modem.<br>**Example**: “tx_handshake_enabled = 0” |
| [ODU] | The VSAT system can work either using the Rx or Tx 10 MHz reference signals provided by the modem or using its own built-in 10 MHz reference signal. It is recommended to use the Tx 10 MHz reference signal from the modem. See also page 6-6 (setup of modem profiles).<br>**Example**: “odu_rx_10_mhz = 1”<br>The VSAT system needs the Tx 10 MHz reference signal in order to allow TX ON.<br>**Example**: “odu_tx_10_mhz = 1” |

Table C-5: Information in the VSAT modem option file

## C.1.3 Configuration example (OpenAMIP)

Examples of modem profile and satellite configuration from the ACU web interface are shown in the figures below.

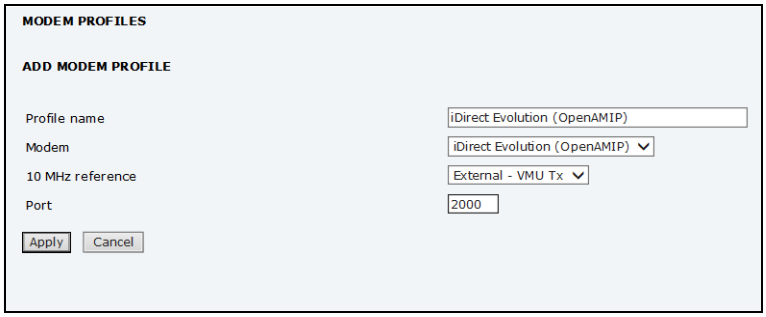


Figure C-4: Modem profile, OpenAMIP (example)

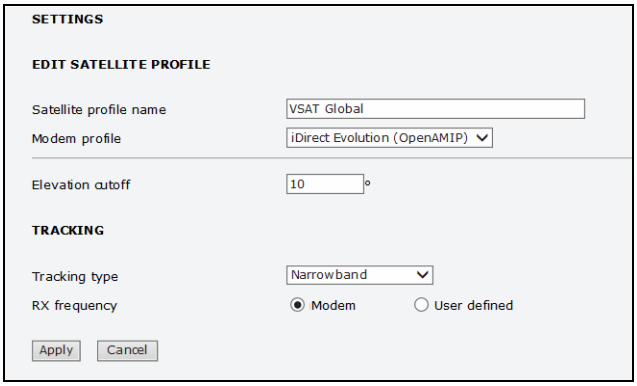


Figure C-5: Satellite profile, OpenAMIP (example)

Simple OpenAMIP protocol in iDS 8.0.2.7 is **NOT** supported by the EXPLORER 8000 series.

Full OpenAMIP protocol from iDX 2.0 and up is supported by the EXPLORER 8000 series.

OpenAMIP protocol version 15 (iDX 3.2): The option file content in some categories has changed:

- Using console command "options set" is not possible.
- command "tx freq" cannot be used.
- editing the option file must be done manually.

### C.1.4 Troubleshooting

It is expected that the modem has been connected with cables to the ACU and that an iDirect OpenAMIP modem profile and satellite profile have been configured in the web interface of the VSAT system and has been activated. For further details see *Configuration example (OpenAMIP)* on page C-12.

It is recommended to connect the service PC to LAN port 1 of the ACU in order to have access to the web server and IP connection to the attached iDirect OpenAMIP modem.

A telnet or ssh client and Internet browser is needed in order to go through the troubleshooting guidelines. It is recommended to use the telnet/ssh client program called PuTTy, which is available for free on the Internet (http://www.putty.org/).

1. Default login to iDirect modems are: User name: admin, Password: P@55w0rd!
2. Every time a setting is changed in the iDirect modem, it must be stored in flash using the following command line command:
   `options flash`
3. After changing a setting and storing the new setting the modem has to boot its application in order to read and use the new setting. This is done with the command line command:
   `reset application`

The iDirect options file is divided into sections; the section name is always CAPITAL letters. Each section has several parameters, and each parameter has a value. See the following example:

```
[MOBILE]
        gps_input = 2
        init_tx_power_offset = 0.000000
        is_mobile = 1
        latlong_interval = 60
        tx_handshake_enabled = 0
```

To change a setting in the MOBILE section use the `options set` command. See example of command here:

```
options set MOBILE gps_input 2
```

Note that setting the `gps_input` parameter to value 2 is written without an equal sign but only with a space character between parameter name and the value.

You can use the following flow chart and the instructions in the notes later in this appendix.

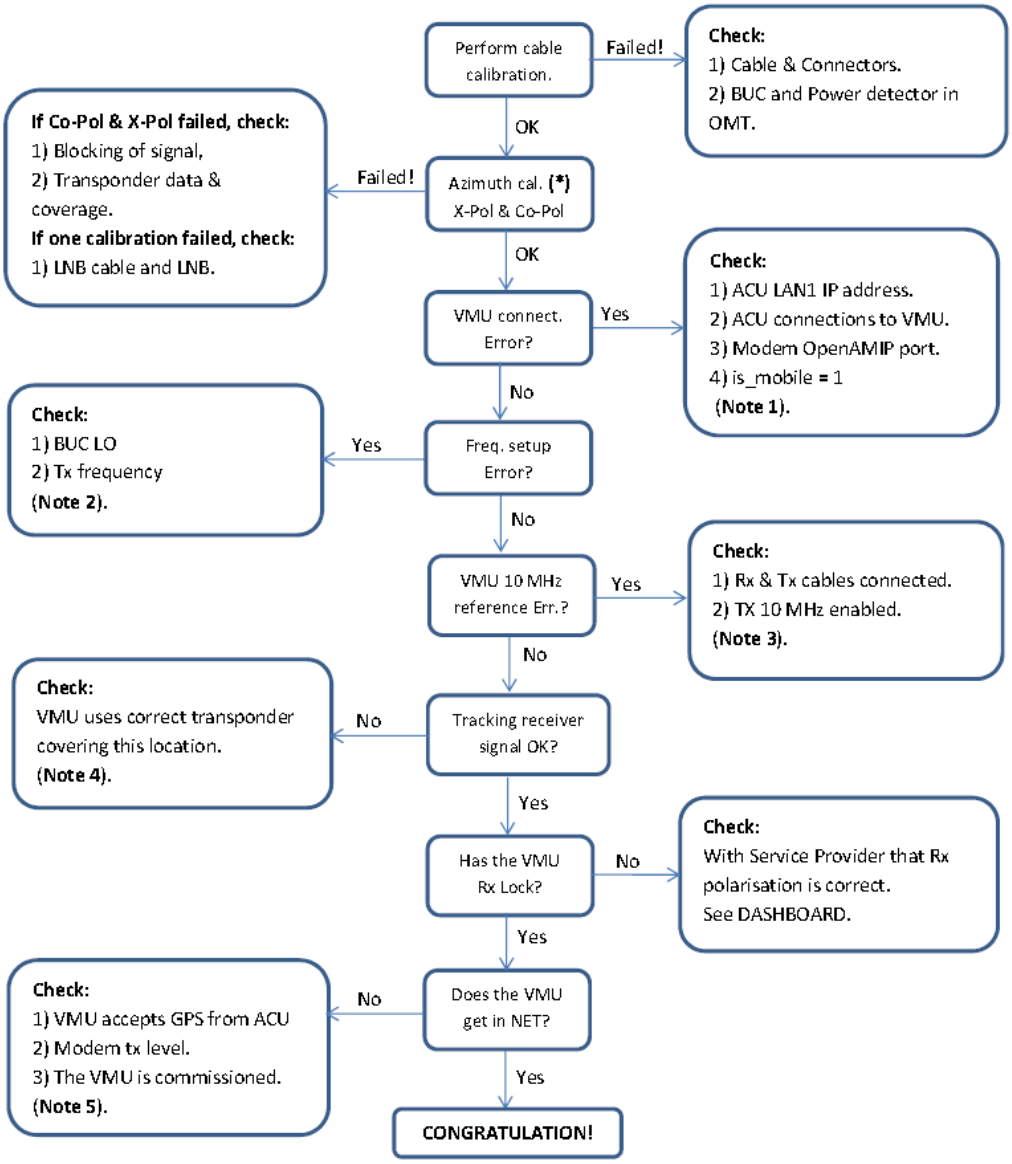


* Use same transponder polarity with both calibrations.

Figure C-6: iDirect OpenAMIP troubleshooting

**Note 1**: Connect to modem with Telnet or serial and issue the following commands:

`options show ANTENNA`
Check: IP address, port # and manufacturer = OpenAMIP.
`options show MOBILE`
Check: is_mobile = 1

**Note 2**: Connect to modem with telnet and issue command:

`options show SATELLITE`
Check: tx_lcl_osc = 12800.000000,
Check: tx_frequency is between: 950.000000 to 1700.000000
Check: rx_lcl_osc + hunt_frequency is between: 10.7 GHz to 12.75 GHz

**Note 3**: Connect to the modem with Telnet and issue commands:

```
options show ODU
```

Check: odu_tx_10_mhz = 1

```
options show MOBILE
```

Check: tx_handshake_enabled = 0

**Note 4**: Connect to the modem with Telnet and issue command:

```
beamselector list
```

Write down the transponder number for one of the beams that has line of sight.
Use the command: beamselector switch <number> -f to force the VSAT modem to use this transponder. E.g:

```
beamselector switch 323 -f
```

Use the command: beamselector lock to lock the VSAT modem to this transponder and stay there (until power cycle or reset application).

**Note 5**: Connect to the modem with Telnet and issue commands:

```
options show MOBILE
```

Check: gps_input = 2

```
tx power
```

Try to increase the tx power step by step up to max. -5 dBm, which is around the P1dB level. E.g. tx power -10

## Examples of commands

```
options set SATELLITE tx_frequency 1450
options set MOBILE gps_input 2
options set MOBILE is_mobile 1
options set MOBILE tx_handshake_enabled 0
options set ODU odu_tx_10_mhz 1
options flash
```

If this fails then the options file is write protected!
Change disable_options_flash_command = 0 first!

```
options set OPTIONS_FILE disable_options_flash_command 0
reset application
```

Starts the VSAT modem application (soft boot)

- Notice that changing options file locally can help determine wrong settings. The settings will probably be changed back to original settings when the VSAT modem gets synchronized with the hub.
- Tell the NOC about the faulty settings so they can correct configuration.

# C.2 OpenAMIP setup for Generic OpenAMIP VSAT modems

## C.2.1 Interfaces and VSAT modem configuration

The following sections describe how to connect an ACU to an OpenAMIP VSAT modem using the Newtec MDM3100 as an example.

### Connections

Connect the ACU and Newtec MDM3100 (OpenAMIP modem) with the following cables:

- 75 Ohm RF cables with F connectors at both ends for RX and TX frequencies.
- Ethernet cable for communication with the modem. Connect the Ethernet cable between the OpenAMIP modem and **LAN 5 (Control)** on the ACU.

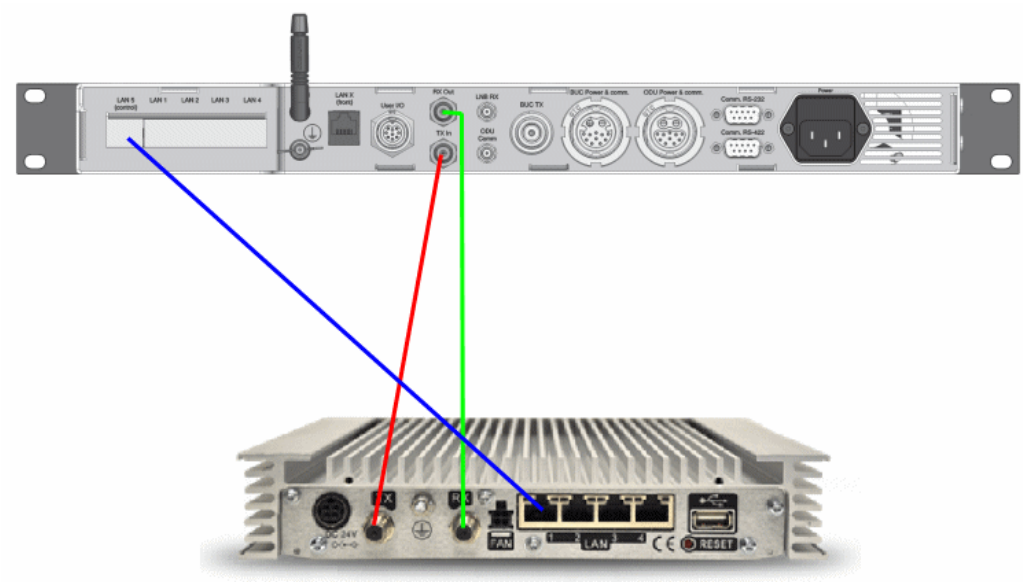

Figure C-7: Connecting Newtec MDM3100 to the ACU (OpenAMIP)

### Modem configuration requirements (Newtec MDM3100)

1. Connect a PC with an Ethernet cable to any free LAN port on the VSAT modem.
2. Set the PC to static IP address: 192.168.1.2
3. Start an Internet browser (e.g. Internet Explorer) and go to URL://192.168.1.1 in order to get access to the web interface of the VSAT modem. For complete configuration possibilities, it may be necessary to log in using the expert login. To log in as Expert enter the following URL in the web browser:
   http://192.168.1.1/cgi-bin/modem_status?login
4. Log in using the Expert password. Contact your Service Provider for the Expert password.
5. Go to **Terminal Configuration** > **Antenna Controlling**.

| Parameter | Settings |
|---|---|
| Automatic Pointing | In the **General** section, enable the option **Automatic Pointing** for the VSAT modem to work with the EXPLORER VSAT system. |
| ACU IPv4 Address | In the **ACU Interface Configuration** section, set the **ACU IPv4 Address** to the IP address configured for LAN Port 5 on the ACU. See *To configure the LAN network* on page 6-14. |
| ACU TCP Port | Enter a valid **ACU TCP Port**. Use this port on the ACU when creating the appropriate modem profile. |
| Use L-Band Frequency | Enable this option for the VSAT modem to work with the EXPLORER VSAT system. |
| TX Polarization | Select the TX Polarization based on the RX polarization configuration from the Service Provider. The valid options are **Horizontal** and **Vertical**.<br>**Note**: The VSAT system does not support Co-pol TX Polarization. |

Table C-6: Newtec MDM3100 (OpenAMIP) configuration of Antenna Controlling

6. Save the **Antenna Controlling** settings.
7. Go to **Outdoor Unit** under **Terminal Configuration**.
8. If no Outdoor Unit is configured, create one to match your EXPLORER VSAT system.

| Parameter | Settings |
|---|---|
| BUC and Modem Frequency Synchronized | In the **General** section, enable the option **BUC and Modem Frequency Synchronized** for the VSAT modem to transmit a 10 MHz reference signal on the TX port. |
| ODU Type ID | ODU Type ID can be 1 up to 64. Enter an **ODU Type ID** not in use. |
| ODO Description | Enter a description so the defined Outdoor Unit is recognizable. |
| 22 kHz Tone | Set this option to **Off**. |
| Voltage | Set this option to **Off**. |
| Receive L.O. | Select the **Receive L.O.** to be either **9.75 GHz** or **10.75 GHz** as these are the supported LNB LO frequencies of the VSAT system.<br>**Note**: If the entered Receive L.O. frequency is different, the VSAT system will be in an inoperable state. |
| Receive L.O. RF Start | Select the **Receive L.O**. RF Start frequency to be in the range from **10.7 GHz to 12.75 GHz** as this is the supported RX frequency range. |

Table C-7: Newtec MDM3100 (OpenAMIP) configuration of Outdoor Unit

| Parameter | Settings |
|---|---|
| Receive L.O. RF Stop | Select the **Receive L.O. RF Stop** frequency to be in the range from **10.7 GHz to 12.75 GHz** as this is the supported RX frequency range. |
| Transmit L.O. | Select the **Transmit L.O.** to be **12.8 GHz** as this is the BUC LO of the EXPLORER 81xx. Remember to inform the hub operator about this when doing line up and commissioning. |
| Transmit L.O. RF Start | Select the **Transmit L.O. RF Start** frequency to be in the range from **13.75 GHz to 14.5 GHz** as this is the supported TX frequency range. |
| Transmit L.O. RF Stop | Select the **Transmit L.O. RF Stop** frequency to be in the range from **13.75 GHz to 14.5 GHz** as this is the supported TX frequency range. |

Table C-7: Newtec MDM3100 (OpenAMIP) configuration of Outdoor Unit

9. Save the ODU Configuration settings.
10. Go to **Terminal Configuration > Satellite Interface**.
11. Configure a **Beam** (if not already configured). Contact your Service Provider for correct configuration settings.

## C.2.2 ACU configuration

To set up the ACU to work with a Generic OpenAMIP modem, do as follows:

1. Add a modem profile with the Generic OpenAMIP modem. See *Modem profile – New entry and Edit* on page 6-6.
2. Add a satellite profile using the Generic OpenAMIP modem profile just created. See *Satellite profiles – New entry and Edit* on page 6-7.
3. Edit the network settings for LAN Port 5 and input the IP information supplied with the modem. See *To configure the LAN network* on page 6-14.
4. Activate the satellite profile.

See also the configuration example in the following section.

### C.2.3 Configuration example (Newtec MDM3100)

Examples of modem profile and satellite configuration from the ACU web interface are shown in the figures below.

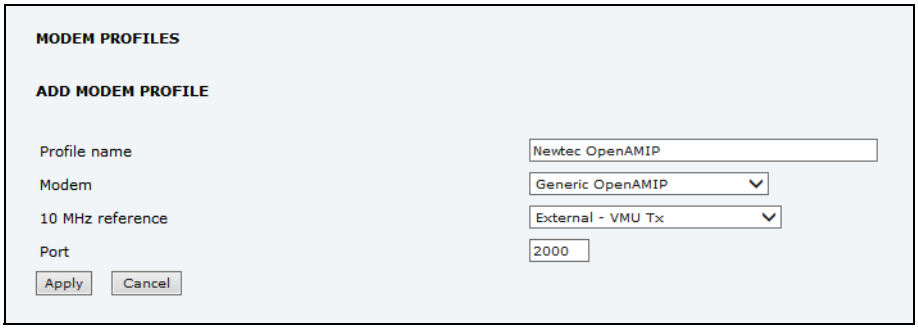


Figure C-8: Modem profile, Generic OpenAMIP (example)

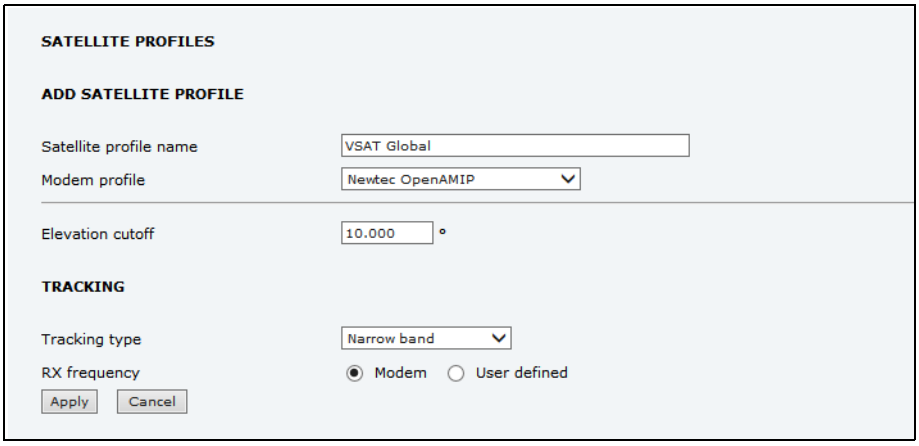


Figure C-9: Satellite profile, Generic OpenAMIP (example)

# C.3 Serial setup for iDirect iNFINITI & Evolution

## C.3.1 Protocol and interfaces

### Introduction

The following sections describe the protocol and interface between the ACU and an iDirect Serial modem. Serial operation is normally used by service providers offering regional VSAT service.

### Connections

Connect the ACU and iDirect modem with the following cables:

- RS-232 console cable for control communication
- 75 Ohm RF cables F-F connectors for rx and tx frequencies.

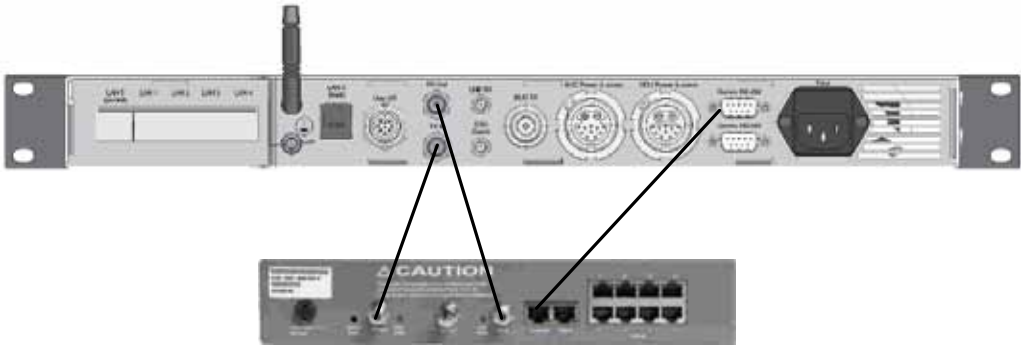

Figure C-10: Connecting iDirect iNFINITI 5000 series to the ACU (Serial)

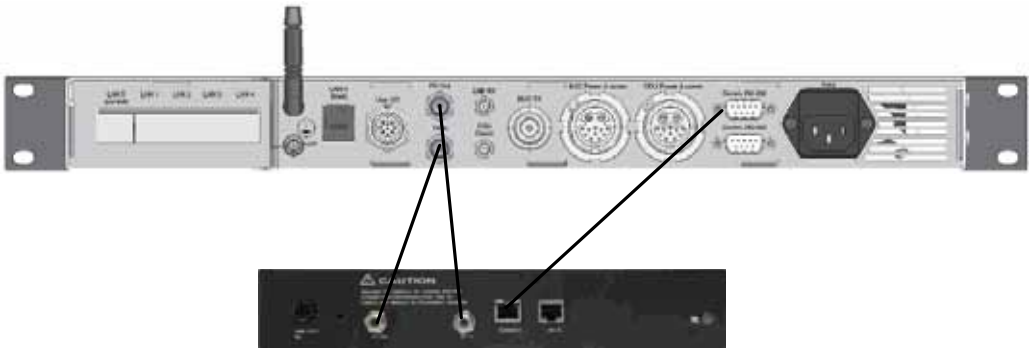

Figure C-11: Connecting iDirect Evolution X5 to the ACU (Serial)

The pin allocation for the RS-232 Console cable is shown in Table C-1 on page C-3. See also Appendix B on page C-1 for a cable drawing.

## C.3.2 Console port settings

The iDirect modem must be configured to use the following console port settings:

- Baud rate: 4800 or 9600
- Data bits: 8
- Parity: None
- Stop bit: 1

### Passwords

The ACU will log in to the modem using root and user passwords. The default passwords are:

- Root: P@55w0rd!
- User: iDirect

### Supported commands

After login to the modem the ACU will issue commands to the modem every second. The following commands are supported by the ACU:

- rx snr
- options show FREQ_TRANS
- rx freq
- tx freq[2]
- latlong <lat> <long>

The signal strength command: rx snr is issued every 2 seconds. The rest of the commands are issued one by one every 2 seconds between each signal strength command. Meaning each of the other commands is issued every 8 seconds.

The signal strength in the ACU display and web interface is shown as dB., e.g: 8.5 dB. The minimum value for Internet connection is around 2-3 dB.

2. Not supported from version 15 (iDirect). Causes a TX frequency warning on the EXPLORER VSAT system

## VSAT modem option file

The option file of the VSAT modem must also include the following information:

| Section in option file | Description |
|---|---|
| Satellite information | Receive frequency of the transponder. Used with “rx freq” command Transmit frequency if known, otherwise just a dummy tx frequency (e.g. 1.450 MHz). Used with “tx freq” command. |
| VSAT system information | The modem provides RX and TX frequency information via a data connection to the EXPLORER VSAT system.<br>The VSAT system has an extended 8 Watt BUC with LO up conversion frequency of 12.8 GHz. |
| GPS | The iDirect modem must be set to mobile unit and receive the GPS information from the ACU with the command “latlong <lat> <long>”.<br>Tx handshake must be disabled in the iDirect modem. |
| Rx 10 MHz | The VSAT system can work either using the Rx or Tx 10 MHz reference signals provided by the modem or using its own built-in 10 MHz reference signal. It is recommended to use the Tx 10 MHz reference signal from the modem. See also page 6-6 (setup of modem profiles). |
| Tx 10 MHz | The VSAT system needs the Tx 10 MHz reference signal in order to allow TX ON. |

Table C-8: Requirements for VSAT modem option file, Serial

## C.3.3 Configuration example (Serial)

Examples of modem profile and satellite configuration from the ACU web interface are shown in the figures below.

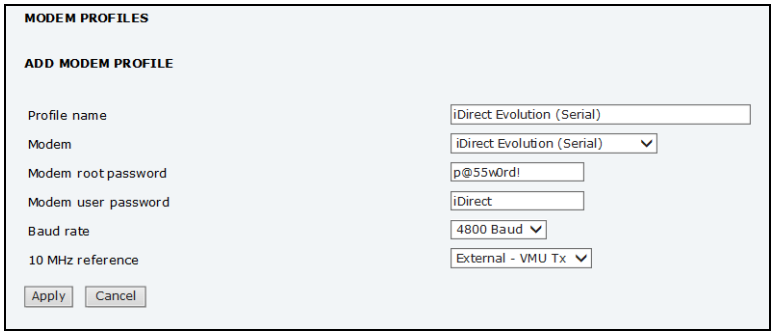


Figure C-12: Modem profile, Serial (example)

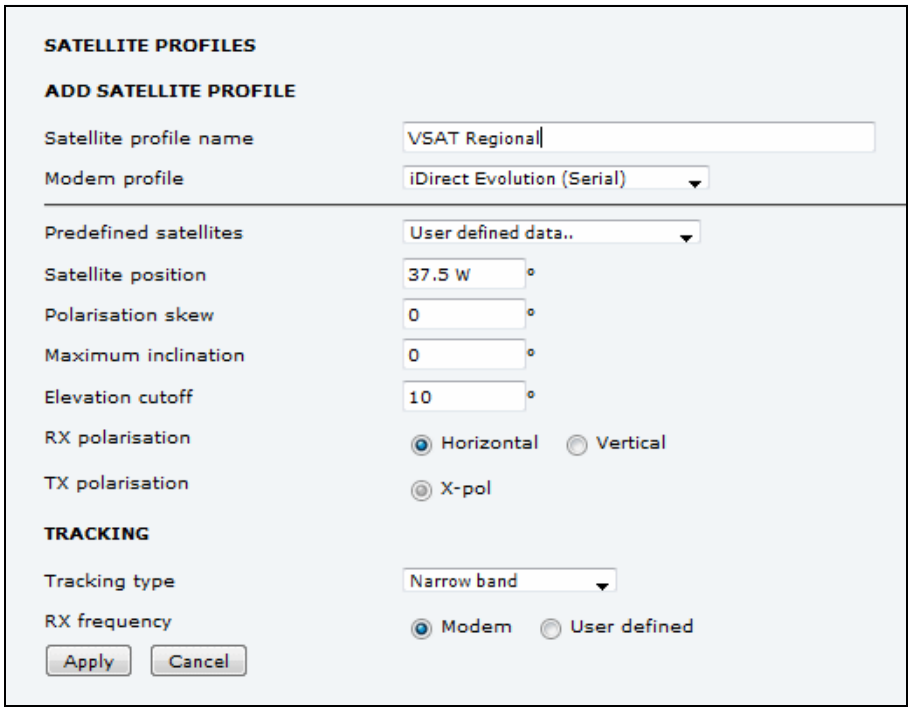


Figure C-13: Satellite profile, Serial (example)

# C.4 COMTECH 570L

## C.4.1 Protocol and interfaces

The following sections describe how to connect the ACU to a COMTECH 570L VSAT modem.

### Protocol

The ACU supports 4800 or 9600 baud on the serial port. You can set the baud rate of the COMTECH 570L at its front MMI.

The ACU issues the following commands on the serial interface to the COMTECH 570L modem:

- 0000/EBN?
- 0000/TFQ?
- 0000/LLO?
- 0000/BLO?
- 0000/RFQ?

An example of the serial communication between the ACU and the COMTECH 570L modem is shown below:

```
0000/EBN?
0000EBN=11.8
0000/TFQ?
0000/TFQ=1310.7956
0000/EBN?
0000/EBN=11.8
0000/LLO?
0000/LLO=10000+
0000/EBN?
0000/EBN=11.9
0000/BLO?
0000/BLO=12800-
0000/EBN?
0000/EBN=11.8
0000/RFQ?
0000/RFQ=1367.5500
```

| Command | Description |
|---|---|
| EBN? | This command is used to show the signal strength in the web interface and on the display of the VSAT system to determine if the COMTECH 570L modem is in Rx Lock.<br>The signal strength goes from 0dB - 16dB, +16dB indicates a signal greater than 16dB, 99.9dB indicates no Rx Lock. |
| TFQ? | TFQ (Transmit Frequency) is used to calibrate the Tx chain in real time, in order to have same output power independent of frequency, temperature and antenna cable length. |
| LLO? | LLO (LNB LO) is used to set up the LNB LO frequency for the system. |
| BLO? | BLO (BUC LO) is used to read the BUC LO. This makes the ADU compatible with future VSAT products using a different BUC LO. |
| RFQ? | RFQ (Receive Frequency) is used as tracking frequency for VSAT. |

Table C-9: COMTECH 570L, commands for serial communication

## Connections

Connect the ACU and the COMTECH 570L with the following cables:

- Standard RS-232 serial cable (using 300KHz Narrow Band tracking receiver)
- Or COMTECH Serial & RSSI cable (using Modem RSSI tracking)
- 2 pcs. 75 Ohm RF cables F-F connectors for rx and tx frequencies.

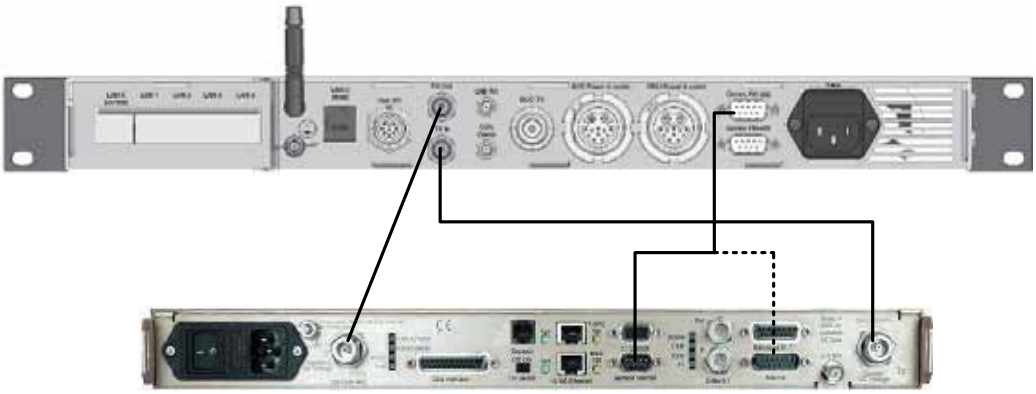

Figure C-14: Connecting COMECH 570L to the ACU (example)

In most cases it is recommended to use the antenna that is built into the 300 kHz narrow band tracking receiver to track the satellite, and you can connect the ACU to the VSAT modem with a standard RS-232 serial cable.

For Modem RSSI tracking use a cable according to the specifications at *Modem Cable COMTECH Serial & RSSI TT7016A* on page B-2 (Cobham part number: 407090A-021).

## C.4.2 Configuration example (COMTECH 570L)

Examples of the modem profile and satellite configuration from the ACU web interface are shown in the figures below.

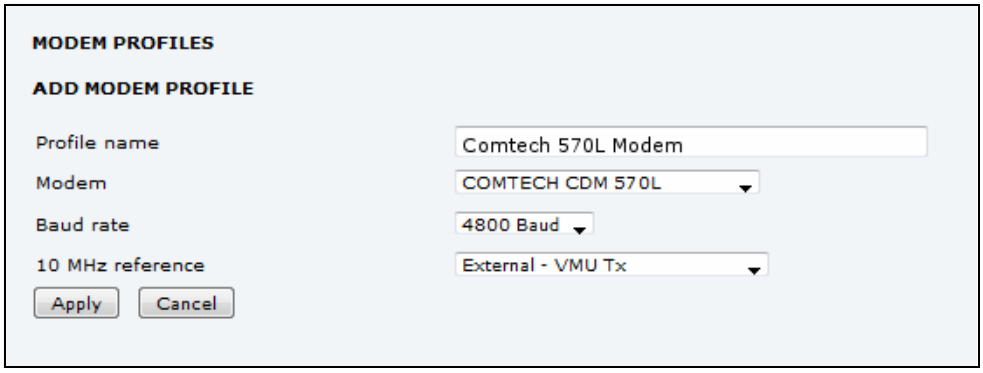


Figure C-15: Modem profile, COMTECH 570L (example)

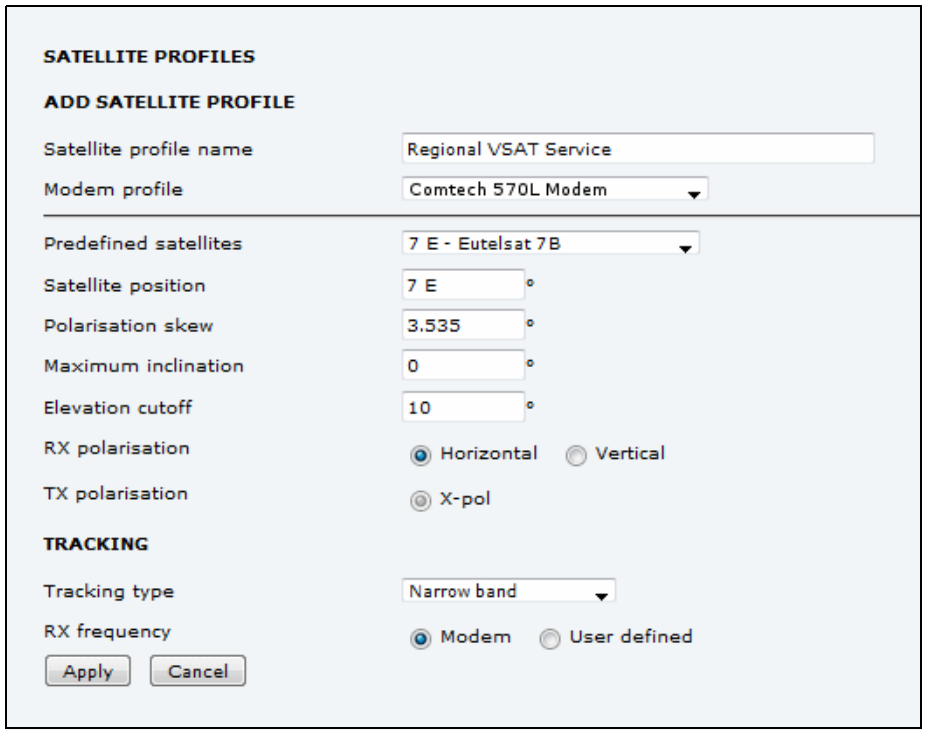


Figure C-16: Satellite profile, COMTECH 570L (example)

# C.5 STM SatLink 2900 VSAT modem

## C.5.1 Interfaces and VSAT modem configuration

The following sections describe how to connect an ACU to an STM SatLink 2900 VSAT modem. The STM SatLink 2900 and the EXPLORER VSAT system are fully integrated and require almost no user setup.

STM SatLink 2900 software version required: 14.2.0 or higher.

### Connections

Connect the ACU and STM SatLink 2900 with the following cables:

- Ethernet cable for TCP/IP data communication. Connect LAN A on the VSAT modem to LAN 1 on the ACU.
- 75 Ohm RF cables F-F connectors for RX and TX frequencies

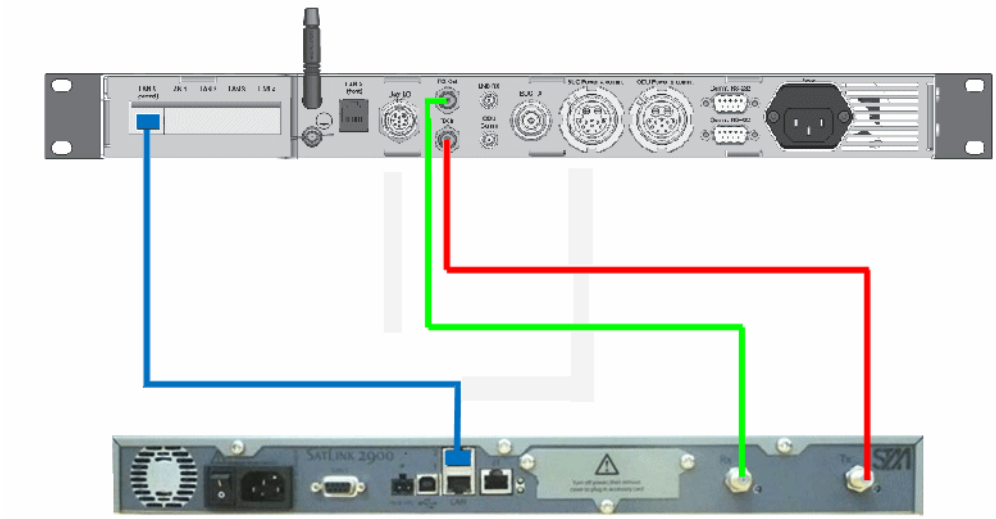

Figure C-17: Connecting STM SatLink 2900 VSAT modem to the ACU

### Modem configuration requirements

Type the following command in a modem console to set up the STM Satlink 2900 modem to use the EXPLORER VSAT system:

```
odu antenna <TBD>[3]
odu txtype 62
odu lnb 62
```

To display the antenna setup for the STM Satlink 2900 modem, type:

```
odu antctrl show
```

3. Antenna ID was not ready at the time of writing.

**Example**:

```
odu antctrl show
Antenna Controller Configuration
--------------------------------
Type                      : Thrane & Thrane EXPLORER 8100
Enabled                   : All
IP address                : 10.110.2.226
Polling frequency         : 5 sec
Antenna Stability Tries   : 300

Antenna Controller Status
--------------------------------
Controller detected     : no
Packets sent            : 0
Packets received        : 0
```

## C.5.2 ACU configuration

To set up the ACU to work with an STM Satlink 2900 VSAT modem, do as follows:

1. Add a modem profile with the STM Satlink 2900 modem. See *Modem profile – New entry and Edit* on page 6-6.
2. Add a satellite profile using the STM Satlink modem profile just created. See *Satellite profiles – New entry and Edit* on page 6-7.
3. Edit the network settings and input the IP information supplied with the modem. See *To configure the LAN network* on page 6-14.
4. Activate the satellite profile.

### C.5.3 Configuration example (STM Satlink 2900)

Examples of modem profile and satellite configuration from the ACU web interface are shown in the figures below.

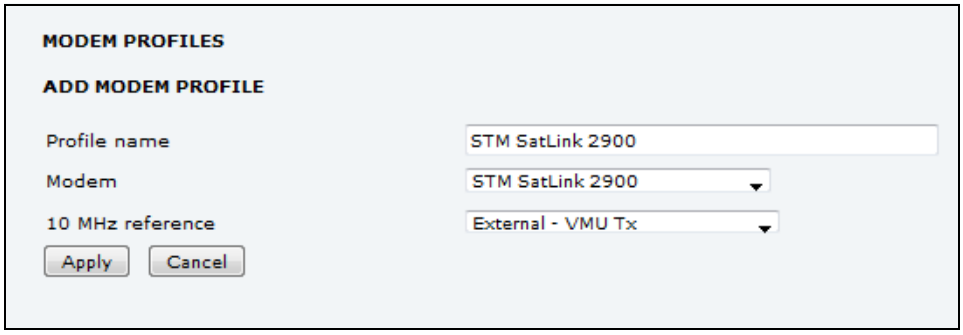


Figure C-18: Modem profile, STM SatLink 2900 (example)

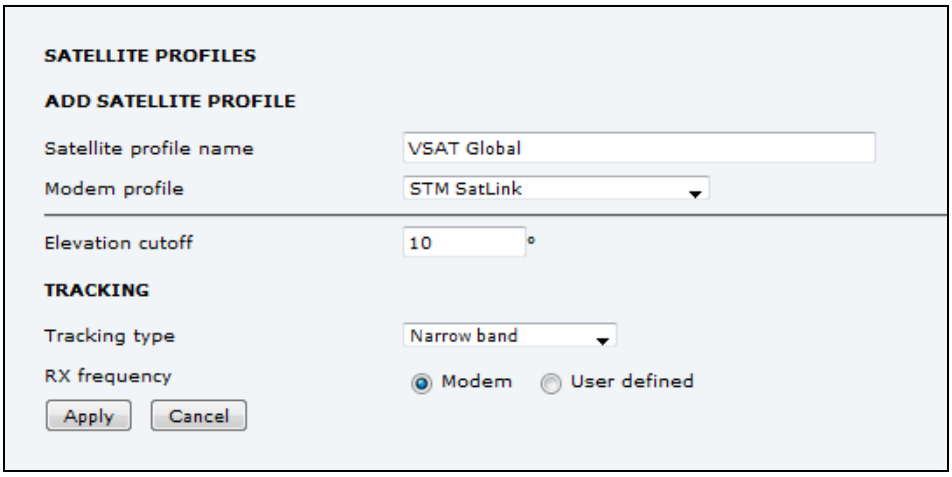


Figure C-19: Satellite profile, STM SatLink 2900 (example)

# C.6 Gilat SkyEdge II VSAT modem

## C.6.1 Interfaces and VSAT modem configuration

The following sections describe how to connect an ACU to a Gilat SkyEdgeII VSAT modem. The Gilat SkyEdge II and the VSAT system are fully integrated and require only little user setup.

### Connections

Connect the ACU and Gilat SkyEdge II with the following cables:

- 75 Ohm RF cables F-F connectors for RX and TX frequencies
- Serial cable for communication with the modem. Connect SERIAL on the VSAT modem to RS-232 on the ACU.

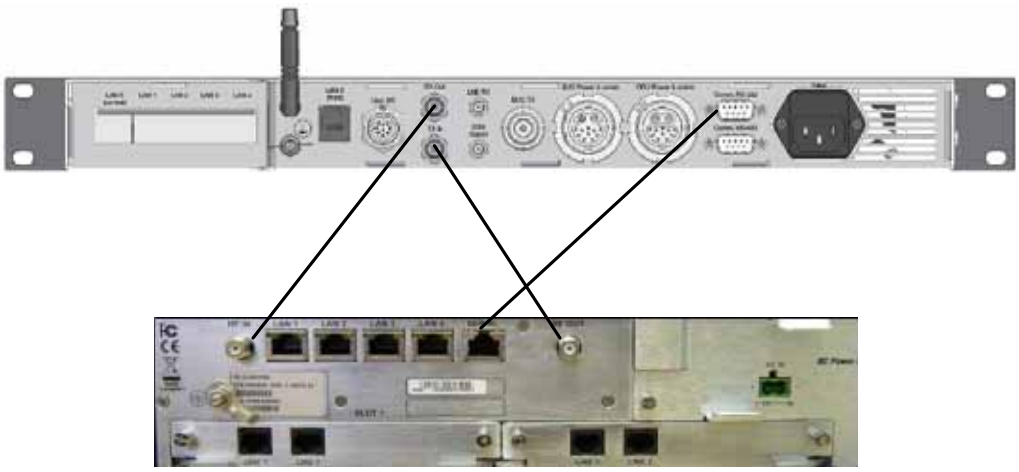

Figure C-20: Connecting Gilat SkyEdge II VSAT modem to the ACU

### Modem configuration requirements

1. Connect a PC with an Ethernet cable to LAN port 1 of the VSAT modem.
2. Set the PC to static IP address: 192.168.1.2
3. Start an Internet browser (e.g. Internet Explorer) and go to URL://192.168.1.1 in order to get access to the web server of the VSAT modem.
4. Login with: User name: inst and Password: $Sat2598$
5. Go to the menu **Installer**.

| Parameter | Settings |
|---|---|
| RF Downlink frequency | In the section **General** the RF Downlink frequency is shown. Write it down as it is going to be used for the selection of LNB LO.<br>Further down on the page you find the BUC and LNB LO frequencies. |
| LNB LO | Depending on the RF Downlink frequency select an appropriate LNB LO of 9.75 or 10.75 GHz which will result in an L-band frequency between 1070 and 1275 MHz which is within the operating frequency band of the SkyEdge II Access modem. |
| BUC LO | Select the BUC to be 12.8 GHz as this is the BUC LO of the EXPLORER VSAT system. Remember to inform the hub operator about this when doing line up and commissioning. |
| BUC 10MHz Reference Signal | The BUC 10MHz Reference Signal must be configured to ON, otherwise the VSAT system will never allow TX. Scroll further down to enable GPS for the Location Coordinates. This enables the serial protocol of the modem so it can communicate with the ACU. |

Table C-10: Configuration of Gilat SkyEdge II VSAT modem

6. Go to the top of the page and press the **Submit** button and **OK** to save the new settings.

The VSAT modem is now configured to be used with the EXPLORER VSAT system.

## C.6.2 ACU configuration

To set-up the ACU to work with a Gilat SkyEdge II VSAT modem, do as follows:

1. Add a modem profile with the Gilat SkyEdge II modem. See *Modem profile – New entry and Edit* on page 6-6.
2. Add a satellite profile using the Gilat SkyEdge II modem profile just created. See *Satellite profiles – New entry and Edit* on page 6-7.
3. Edit the network settings and input the IP information supplied with the modem. See *To configure the LAN network* on page 6-14.
4. Activate the satellite profile.

See also the configuration example in the following section.

## C.6.3 Configuration example (Gilat SkyEdge II)

Examples of modem profile and satellite configuration from the ACU web MMI are shown in the figures below.

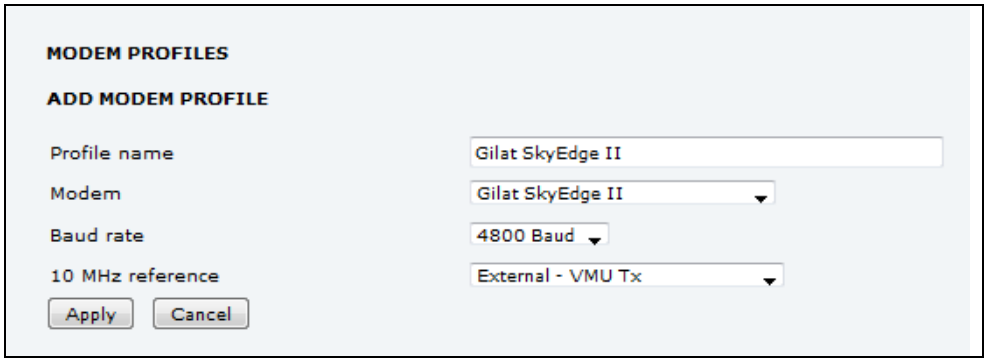


Figure C-21: Modem profile, Gilat Sky Edge II (example)

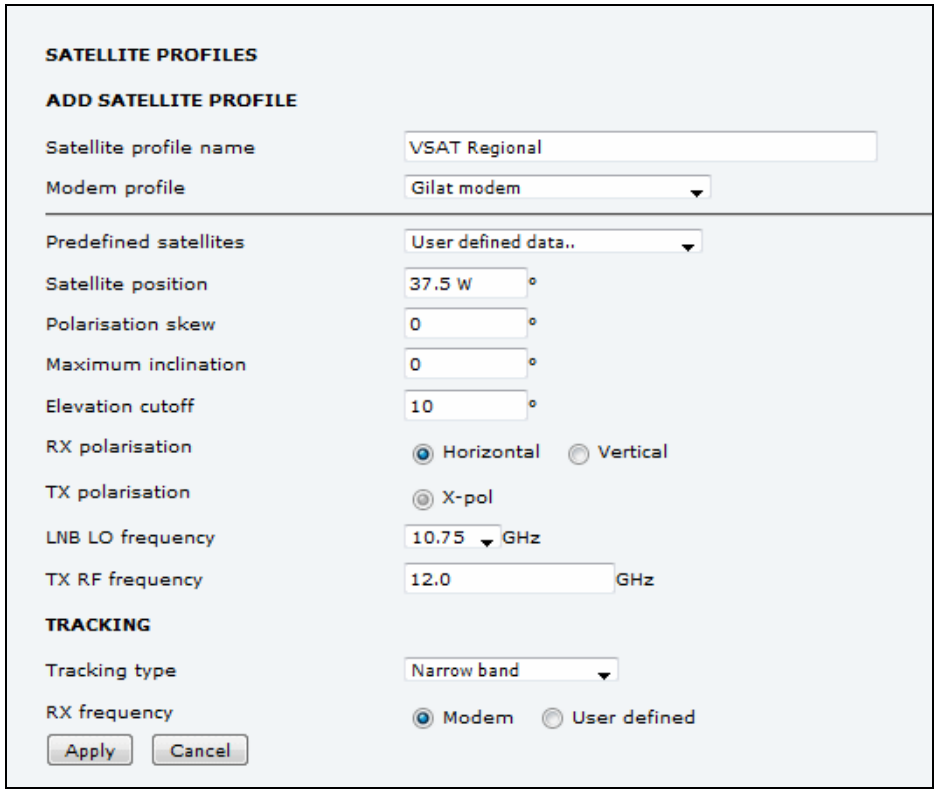


Figure C-22: Satellite profile, Gilat Sky Edge II (example)

# Command line interface

This appendix contains a description of the command line interface for the EXPLORER 8000 series VSAT terminals and a command reference for supported commands.

- *Introduction*
- *Supported commands*

## D.1 Introduction

After you have done the initial configuration and connected the VSAT system to your network, you can use Telnet to configure the VSAT system. You can also set up VSAT modem parameters. Note that the following sections cover the command line interface for all EXPLORER 8000 series VSAT terminals. Some of the commands may not be relevant for your terminal.

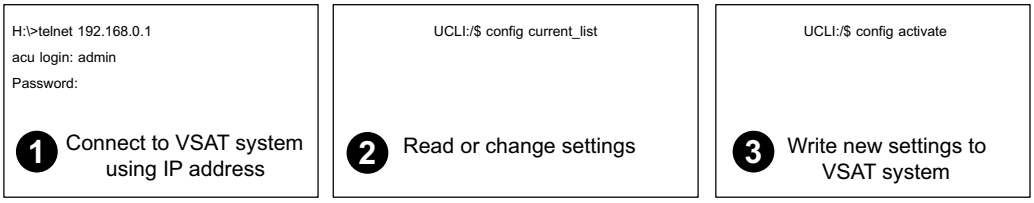


Figure D-1: How to use the command line interface (example for telnet)

After successful login you can read and change settings. Use the command **`config activate`** to activate the new settings in the ACU. You will need to refresh the browser window before the changed settings become visible.

**Note** Every change is performed on the active satellite profile or the active VSAT modem profile. Parameter identifiers are case sensitive.

### D.1.1 Telnet connection

You can access the command line interface via Telnet.

#### User name and password

Access to the VSAT system system is protected by a user name and password. This is the same user name and password that is used in the web interface under **ADMINISTRATION**.

### Telnet

The interface is on the standard Telnet port 23 or SSH port 22. Use any LAN port and corresponding IP address of the ACU (except LAN 2 on GX/Ka ACU). To start telnet session do as follows:

1. Open a Telnet client of your choice.
2. At the prompt, enter the IP address of the ACU, default login **admin** and default password **1234**.

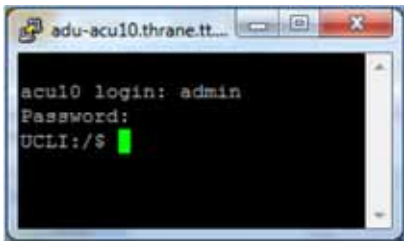


Figure D-2: Command line interface, login

## D.1.2 Help

If you enter **`help`** directly at the prompt **`UCLI:/$`** all available commands are listed. Additionally any command will take **`help`** as first argument and display detailed information of the specific command.

## D.1.3 Conventions

The command description below uses the following special typography:

| Convention | Description |
|---|---|
| `Courier font` | Information that is displayed on the screen. |
| **`Bold Courier font`** | Text the user must enter. |
| `<argument>` | Required argument |
| `[argument]` | Optional argument |

Table D-1: Command typography

**Example**:
```
satellite lon [longitude]
zone <id> active <yes | no>
```

# D.2 Supported commands

The following commands are described in detail. They are listed in alphabetical order.

- *config*
- *demo*
- *exit*
- *help*
- *modem*
- *satellite*
- *status*
- *system*
- *track*
- *zone*
- *antenna_data*

## D.2.1 config

| Command | Description |
|---|---|
| **`config`** | Shows the sub commands available, including a short description. |
| **`config pending_list`** | Shows the number of pending changes. |
| **`config current_list`** | Shows the values for the current satellite profile, antenna and some tracking information. |
| config discard | Discards all pending changes. |
| **`config activate`** | Use this command to save and activate the pending changes in the VSAT system. |

Table D-2: UCLI command: `config`

### D.2.2 demo

| Command | Description |
|---|---|
| **demo start** | Starts a demo pattern where the antenna will turn azimuth, elevation and cross elevation until it receives the command **demo stop.** |
| **demo stop** | Stops the antenna demo pattern. |
| **demo reset** | Resets the antenna to angle 0. |

Table D-3: UCLI command: demo

### D.2.3 exit

| Command | Description |
|---|---|
| **exit** | Exits the connection to the VSAT system. |

Table D-4: UCLI command: exit

### D.2.4 help

| Command | Description |
|---|---|
| **help** | Shows a list of commands available, including a short description. |
| **help satellite** | Shows the sub commands and description for the command satellite. |
| **help modem** | Shows the sub commands and a short description for the command modem. |
| **help track** | Shows the sub commands and description for the command track. |
| **help status** | Shows the sub commands and description for the command status. |
| **help system** | Shows the sub commands and a short description for the command system. |
| **help config** | Shows the sub commands, unit and description for the command config. |
| **help zone** | Shows the sub commands, unit and description for the command zone. |

Table D-5: UCLI command: **help**

### D.2.5 modem

| Command | Description |
|---|---|
| **`modem`** | Shows a list of sub commands available, including a short description. |
| **`modem name`** | Shows the VSAT modem name of the currently active satellite profile (entered in the web interface). |
| **`modem model`** | Shows the currently active VSAT modem model (selected in the web interface). |
| **`modem gps_fix`** | Shows the current GPS position |
| **`modem gps_lat`** | Shows the latitude value of the current position. |
| **`modem gps_lon`** | Shows the longitude value of the current position. |

Table D-6: UCLI command: **`modem`**

### D.2.6 satellite

| Command | Description |
|---|---|
| **`satellite name`** | Shows the name of the currently active satellite profile. |
| **`satellite lon`**<br><br>**`satellite lon 1W`** | Shows or sets the longitude position of the satellite, in degrees.<br>• 1.0W or 1.0E or -1.0 for west and 1.0 for east |
| **`satellite skew`**<br><br>**`satellite skew 3.7`** | Shows or sets an additional skew offset of the satellite[a]. Some satellite has additional skew because they have been placed different in the orbit. E.g. Optus satellites in Australia are offset -45 degrees. Most satellites have 0 degree skew offset.<br>• Skew of the satellite: –90˚ to +90˚. |
| **`satellite max_inc`**<br><br>**`satellite max_inc 2.5`** | Shows or sets the maximum inclination of the used satellite. Some satellites are old and are therefore moving in larger circles in space. Setting the maximum inclination will add this to the VSAT system acquisition window size used to find the satellite.<br>• Maximum inclination of satellite 0.0˚ to 90˚ |

Table D-7: UCLI command: **`satellite`**

| Command | Description |
|---|---|
| **satellite rx_pol**<br><br>**satellite rx_pol v** | Shows or sets the current RX polarization:<br>• v (vertical)<br>• h (horizontal)<br>• l (left)<br>• r (right) |
| **satellite tx_pol**<br><br>**satellite tx_pol v** | Shows or sets the current TX polarization:<br>• v (vertical)<br>• h (horizontal)<br>• l (left)<br>• r (right) |
| **satellite ele_cut_off**<br><br>**satellite ele_cut_off 5** | Shows or sets the elevation referenced to earth where the VSAT system must shut off for transmission. This is an FCC requirement. The elevation cut off depends on how much power is transmitted and which coding is used.<br>• Valid range: 0˚ to 90˚ |
| **satellite rx_lo** | Shows the Rx LO / LNB LO.<br>Range: 9.6 GHz to 11.3 GHz.<br>GX: 18.25 GHz |
| **satellite rx_rf_freq**<br><br>**satellite rx_rf_freq 12.123456 9.75** | Shows or sets the Rx frequency and LNB Lo frequency.<br>• Ku band:<br>RF frequency: 10.7 – 12.75 GHz.<br>LNB Lo frequency: 9.6 GHz – 11.3 GHz.<br>The VSAT system supports any LNB Lo.<br>• Ka band:<br>RF frequency: 19.2 – 20.2 GHz.<br>LNB Lo frequency: 18.25 GHz.<br>**Note**: Setting the Ku-band Rx frequency and LNB Lo automatically configures the L-band rx frequency:<br>Rx L-band freq = rx_rf_freq – LNB Lo<br>**Example**: 1567.890 MHz = 11.567890 GHz – 10 GHz |

Table D-7: UCLI command: **satellite** (Continued)

| Command | Description |
|---|---|
| **`satellite rx_if_freq`**<br><br>**`satellite rx_if_freq 1200.123 9.75`** | Shows or sets the IF Rx frequency together with the LNB Lo frequency.<br>• Ku band:<br>IF frequency within 950 MHz – 2150 MHz.<br>LNB Lo frequency within 9.6 GHz – 11.3 GHz.<br>The VSAT system supports any LNB Lo.<br>• Ka band:<br>IF frequency within 950 MHz – 1950 MHz.<br>LNB Lo frequency: 18.25 GHz.<br>**Note**: Setting the L-band Rx frequency and LNB Lo automatically configures the Ku-band Rx frequency:<br>Rx Ku-band frequency = LNB Lo + rx_if_frequency<br><br>**Example**: 11.567890 GHz = 10 GHz + 1567.890000 MHz |
| **`satellite tx_lo`** | Shows the current TX LO frequency, fixed at<br>Ku band:12.8 GHz<br>Ka band: 28.05 GHz |
| **`satellite tx_rf_freq`**<br><br>**`satellite tx_rf_freq 14.123456`** | Shows or sets the RF frequency used for tx.<br>• Valid range:<br>Ku band: 13.75 GHz to 14.5 GHz.<br>Ka band: 29 GHz to 30 GHz.<br>**Note**: Configuring the Ku-band tx frequency automatically configures the L-band frequency:<br>L-band frequency = Ku-band tx frequency – 12.8 GHz (BUC Lo)<br><br>**Example**: 1308.300000 MHz = 14.108300 GHz – 12.8 GHz |
| **`satellite tx_if_freq`**<br><br>**`satellite tx_if_freq 1200.123`** | Shows or sets the IF frequency for tx.<br>• Valid range:<br>Ku band: 950 MHz to 1700 MHz.<br>Ka band: 950 MHz to 1950 MHz<br>**Note**: Configuring the L-band tx frequency automatically configures the Ku-band frequency:<br>Ku-band frequency = 12.8 GHz (BUC Lo) + L-band frequency<br><br>**Example**: 14.108300 GHz = 12.8 GHz + 1308.300000 MHz |

Table D-7: UCLI command: **`satellite`** `(Continued)`

a. Relevant for Ku band.

### D.2.7 status

| Command | Description |
|---|---|
| **`status`** | Shows the sub commands available, including a short description. |
| **`status system`** | Shows the current status of the VSAT system. |
| **`status track_all`** | Shows the current values for all tracking parameters:<br>• vessel heading<br>• azimuth relative<br>• elevation relative<br>• polarization skew<br>• GPS latitude and longitude |
| **`status event_list`** | Shows a list of active events. |

Table D-8: UCLI command: **`status`**

### D.2.8 system

| Command | Description |
|---|---|
| **`system`** | Shows the sub commands available, including a short description. |
| **`system restart`** | Sends a command to the ACU to restart the system instantaneously. It makes a power-on self test and then points to the last used satellite. |
| **`system info`** | Shows the software version, part names and serial numbers of the VSAT system. |

Table D-9: UCLI command: **`system`**

### D.2.9 track

| Command | Description |
|---|---|
| **`track`** | Shows the sub commands available, including a short description. |
| **`track mode`**<br><br>**`track mode dvb`** | Shows or sets the receiver bandwidth or mode, the way the VSAT system tracks the satellite:<br>• narrow (recommended, uses the built-in 300 kHz filter of the VSAT system)<br>• rssi (uses the RSSI signal from the VSAT modem)<br>• wide (uses the wide-band filter to track the satellite)<br>• dvb (uses the built-in DVB-S2 receiver of the VSAT system to track the satellite. You must configure `dvb_sym` and `dvb_nid`.)<br>• GSC (uses Inmarsat Global Signalling Channel<br>• GSCpwr (uses power of Inmarsat Global Signalling Channel) |
| **`track dvb_sym`**<br><br>**`track dvb_sym 22`** | Shows or sets the current mega symbols rate for the DVB-S2 receiver when in dvb mode. The symbol rate used to verify and track a transponder.<br>• Valid range: 0.1 — 99 |
| **`track dvb_nid`**<br><br>**`track dvb_nid 0`** | Shows or sets the DVB NID to be verified by the built-in DVB-S2 tracking receiver, when using tracking mode DVB. It configures the NID used to verify and track a transponder.<br>• Valid range: 0 — 65535<br>A NID of ‘0’ disables the NID check. Then the NID will be omitted in the verification of the transponder. |
| **`track rx_rf_freq`** | The frequency for the receiver to tune to. Verify that the frequency is in the same range as the modem rx_rf_frequency, above or below 11.7 GHz. I.f rx_rf_freq is set to 0, the tracking frequency is the same as the RX frequency provided by the modem<br>• Valid range:<br>Ku band: 10.7 GHz to 12.75 GHz<br>Ka band: 19.2 GHz to 20.2 GHz |

Table D-10: UCLI command: `track`

## D.2.10 zone

| Command | Description |
|---|---|
| **zone** | Shows the sub commands, unit and description for the command zone. |
| **zone <id> azimuth <start angle> <end angle>** | Sets the azimuth angles of the blocking zone for one zone.<br>• Valid zones: 0 to 7<br>• Valid angles: 0 to 360 |
| **zone <id> elevation <start angle> <end angle>** | Sets the elevation angles for a blocking zone.<br>• Valid zones: 0 to 7<br>• Valid angles: 0 to 360 |
| **zone <id> tx_off <yes \| no>** | Enables or disables TX inside the blocking zone. |
| **zone <id> active <yes \| no>** | Enables or disables the blocking zone. |
| **zone <id>** | Shows the setting for the blocking zone. |

Table D-11: UCLI command: zone

## D.2.11 antenna_data

| Command | Description |
|---|---|
| **antenna_data** | Shows the sub commands, unit and description for the command antenna_data |
| **antenna_data select [pcm \| backup]** | Use antenna data from the specified unit.<br>To copy antenna data from the PCM to the ACU and use these as primary data, enter:<br>**antenna_data select pcm** |
| **antenna_data buc** | Shows the 1 dB compression point in 1/100 dBm and the BUC gain in 1/100 dB. |
| **antenna_data buc <1dB_compress> <buc_gain>** | Sets the 1 dB compression point in 1/100 dBm and the BUC gain in 1/100 dB.<br>• Valid range:<br>**<1dB_compress>**: 3000-5000 (30-50 dBm)<br>**<buc_gain>**: 2500-8000 (25-80 dB)<br>**Example**: To set the 1 dB compression point to 39 dBm and the BUC gain to 65 dB, enter the following command:<br>**antenna_data buc 3900 6500** |

Table D-12: UCLI command: **antenna_data**

| Command | Description |
|---|---|
| **antenna_data lnb** | Shows the lnb settings |
| **antenna_data lnb [standard \| njr2841 \| custom <5/10 parameters>]** | Sets the lnb data.<br><br>**Example**: To set LNB data to custom "two band LNB with LO 9.75 GHz and 10.75 GHz and voltage selection of band", enter:<br><br>**antenna_data lnb custom 0 130 9750000 10700000 11700000 0 180 10750000 11700000 12750000** |
| | |

Table D-12: UCLI command: **antenna_data**

# System messages

This appendix has the following sections:

- *Event messages – overview*
- *Lists of events*

## E.1 Event messages – overview

The EXPLORER VSAT system detects events during

- POST (Power On Self Test) – a self test performed at every power-up.
- PAST (Person Activated Self test) – started in the web interface
- CM (Continuous Monitoring) – automatically performed while the system is in operation.

When the VSAT system detects an event that requires your action, it issues an event message and the red Fail/Pass LED in the LED panel of the ACU is lit. As long as an event is active, it is shown in the ACU display and the web interface (in HELPDESK > Event list or click the event icon on the DASHBOARD).

**Note** Active events and notifications are shown. As soon as the event is cleared, it is not displayed any longer. It is then moved to the Notifications section. Notifications are cleared after 24 hours.

State the Event ID when contacting your service partner.

The event description might contain a number of digits in brackets, e.g. (00000005). This is supplemental information and used for service and diagnostics purposes.

# E.2 Lists of events

**Note** These lists include event messages for other products as well as the EXPLORER 8000 series, so some of the listed event messages may never appear in your VSAT system.

## E.2.1 ACU events

| Error code (ID) | Severity | Description | Explanation |
|---|---|---|---|
| 08060-0 | WARNING | Antenna modem | ACU/Antenna communication error detected (framing and parity). If the situation is persistent, check if cable specifications comply (length and attenuation). |
| 08061-0 | WARNING | VMU linux shell password | The specified password (root) for the satellite modem is not accepted by the modem. |
| 08062-0 | WARNING | VMU debug shell password | The specified password (user) for the satellite modem is not accepted by the modem. |
| 08063-0 | ERROR | Antenna connection | The ACU has lost connection with the antenna. |
| 08064-0 | ERROR | ADM PLL lock | The intermediate frequency PLL is not in lock. Check the 10 MHz reference signal. |
| 08065-0 | WARNING | GNSS data | Missing GNSS data (fix). |
| 08066-0 | WARNING | Heading data | Missing heading information. Check cable and heading provider device. |
| 08067-0 | ERROR | PCB temperature | ADM temperature too high. Make sure there is compliance with the environmental specifications. |
| 08068-0 | ERROR | PSM power | The PSM fails to provide the requested supply voltage. |
| 08069-0 | WARNING | Blocking Zone | The antenna has entered a blocking zone. |
| 0806A-0 | WARNING | VMU connection | The ACU has lost connection to the satellite modem. |
| 0806B-0 | WARNING | ROSS connection | The ACU has lost connection with the ROSS device. |
| 0806C-0 | ERROR | VMU frequency setup | There is a mismatch in the frequency setup. Probably the satellite modem is not configured correctly to match the requirements of the ACU and antenna. A common mismatch is the absence of Rx or Tx LO parameter in the satellite modem. |

Table E-1: Event messages for ACU

| Error code (ID) | Severity | Description | Explanation |
|---|---|---|---|
| 0806D-0 | ERROR | Antenna power | The antenna supply voltage is outside the allowed limits. This may happen if the PSM fails to provide the requested supply voltage. |
| 0806E-0 | ERROR | VMU reference signal | There is no VMU Rx or Tx reference signal. Whether this is Rx or Tx reference depends on the user's selection on the modem profile page in the web interface. Make sure the VMU Rx/Tx cable is connected and that the VMU is configured to output the RX/TX reference signal. |
| 0806F-0 | WARNING | ROSS synchronization | The ACU has become out of sync with the ROSS device, most likely because the ACU has been replaced, or the ROSS satellite profile is new. A manual (forced) handoff sequence must be initiated from the ROSS, refer to the ROSS manual. |
| 08078-0 | WARNING | VMU TX frequency invalid | The satellite modem provided a TX frequency of zero. This may degrade tx performance. To remove this warning re-configure the modem to provide the correct tx frequency. |
| 08100-0 | ERROR | PSM low voltage (22 V) | The ADM measures a different antenna voltage than expected. If the problem is not solved by a restart, and the PSM is not reporting any errors, the ADM is probably defective. |
| 08101-0 | ERROR | PSM high voltage (48 V) | The ADM measures a different antenna voltage than expected. Check for short circuit of the antenna coax connector. If the problem is not solved by a restart, and the PSM is not reporting any errors, the ADM is probably defective. |
| 08102-0 | ERROR | PSM 5 V power | Internal voltage supply error of the ADM. |
| 08103-0 | ERROR | ADM hotswap | The ACU is not able to supply the correct voltage to the antenna. Check for short circuits in coax cable and the antenna |
| 08104-0 | ERROR | Antenna communication | The ACU cannot communicate with the antenna. Check cable and antenna. |
| 08107-0 | ERROR | ADM FPGA load | The ADM FPGA cannot be initialised and loaded. |
| 08108-0 | ERROR | TX Power Detector calibration | The power detector calibration is not valid. |

Table E-1: Event messages for ACU (Continued)

| Error code (ID) | Severity | Description | Explanation |
|---|---|---|---|
| 08109-0 | ERROR | Antenna XIM data | There is a mismatch in the antenna configuration data. Either the PCM or the VIM in the antenna are malfunctioning or one of them has been replaced. In the latter case, select which is the original device in the web interface and restart the system. |
| 0810A-0 | ERROR | ADM production data | Production data has been corrupted. |
| 0810B-0 | ERROR | Antenna software version | An error has occurred during upload of software to the antenna, the antenna software version is not as expected. Either the software in the ACU does not meet the minimum version required by the antenna, the software image in the ACU is corrupted or the upload procedure failed because of a communication error. |
| 0810C-0 | ERROR | File system integrity | One or more file system partitions are corrupt. You may have lost your settings and collected statistics. If restarting the system does not help, contact your service partner. |
| 08840-0 | WARNING | Master PLL lock | The master PLL has lost lock. Check the input reference signal. |
| 09000-0 | ERROR | KDM 3V3 supply | Internal 3V3 voltage supply error in the KDM. |
| 09001-0 | ERROR | KDM 12V supply | Internal 12V voltage supply error in the KDM. |
| 09002-0 | ERROR | KDM display | Display hardware error in the KDM. |
| 09010-0 | ERROR | KDM link/SW version | Link to the KDM module could not be established. Either the KDM board is malfunctioning, or - if the system software has just been updated - the software is too old and is not compatible with the KDM hardware. |
| 0B000-0 | ERROR | PSM production data | Missing or invalid production data in the PSM. Replace it. |
| 0B001-0 | ERROR | NMEA 2000 identifier | Missing or invalid production data in the PSM. Replace it. |
| 0B010-0 | ERROR | PSM link/SW version | Link to the PSM module could not be established. Either the PSM board is malfunctioning, or - if the system software has just been updated - the software is too old and is not compatible with the PSM hardware. |
| 0B060-0 | WARNING | NMEA 0183 parse error | Parse errors detected on the NMEA 0183 interface. Check NMEA 0183 cable, signal levels etc. |

Table E-1: Event messages for ACU (Continued)

## E.2.2 Antenna events

| Event ID | Severity | Description | Explanation |
|---|---|---|---|
| 0A001-0 | ERROR | Production data | Production data is invalid. |
| 0A002-0 | ERROR | XIM internal | Antenna configuration data stored in the PCM module is invalid. |
| 0A003-0 | ERROR | XIM external | Antenna configuration data stored in the VIM/TIM module is invalid. |
| 0A004-0 | ERROR | XIM I/X match | Antenna configuration data stored in the PCM module does not match the configuration data stored in the VIM/TIM module. |
| 0A005-0 | ERROR | Antenna type | The configured antenna type is not supported or unknown. |
| 0A006-0 | ERROR | PCM FPGA load | The PCM FPGA cannot be initialised and loaded correctly. |
| 0A007-0 | ERROR | XIM FPGA load | The VIM/TIM FPGA cannot be initialised and loaded correctly. |
| 0A008-0 | ERROR | XIM production | Production/calibration data stored in the VIM/TIM module is invalid. |
| 0A00A-0 | ERROR | GNSS initialisation | The GNSS device cannot be initialised. Check cable and GNSS device. |
| 0A014-0 | ERROR | AMB device discovery | Missing one or more of the following devices: ISM, DDM and PMM. Check cables. |
| 0A015-0 | ERROR | Azi DDM ABS device | Cannot initialise the azimuth DDM. Info: 0x00000000: Device not found (possible cabling problem) 0x0000bbaa: Device internal error (replace device) aa=status, bb=state. |
| 0A016-0 | ERROR | Xel DDM ABS device | Cannot initialise the cross-elevation DDM. Info: See 0A015-0. |
| 0A017-0 | ERROR | Ele DDM ABS device | Cannot initialise the elevation DDM. Info: See 0A015-0. |
| 0A018-0 | ERROR | ISM ABS device | Cannot initialise the ISM Info: 0x00000000: Device not found (possible cabling problem) 0x000cbbaa: Device internal error (replace device) aa=status, bb=state, c=calibration data error. |
| 0A019-0 | ERROR | PMM ABS device | Cannot initialise the PMM. Info: See 0A015-0. |
| 0A01A-0 | ERROR | BCM ABS device | Cannot initialise the BCM. Info: See 0A015-0. |

Table E-2: Event messages for antenna

| Event ID | Severity | Description | Explanation |
|---|---|---|---|
| 0A01E-0 | ERROR | Sensor sanity | Too many invalid values measured by the ISM during initialisation. Check for vibrations or malfunctioning ISM. |
| 0A021-0 | ERROR | Azi axis calibration | Azimuth axis zero reference not found. Check belt and zero reference module. Info: 0x00000001: Timeout (operation did not complete in time) 0x00000010: Encoder or mechanical problem 0x00000020: Zero reference not found 0x00000040: End stop not found. |
| 0A022-0 | ERROR | Xel axis calibration | Cross-elevation axis zero reference or end stops not found at expected locations. Check belt, zero reference module, and end stops. Info: See 0A021-0. |
| 0A023-0 | ERROR | Ele axis calibration | Elevation axis zero reference or end stops not found at expected locations. Check belt, zero reference module, and end stops. Info: See 0A021-0. |
| 0A024-0 | ERROR | Pol axis calibration | Polarisation axis zero reference or end stops not found at expected locations. Check movement of the polarisation unit and the zero reference module. Info: See 0A021-0. |
| 0A025-0 | ERROR | Antenna calibration | One or more errors occurred during antenna start-up Info: 0x00000001: Timeout (calibration did not complete in time) 0x00000010: Azimuth axis 0x00000020: Cross-elevation axis 0x00000040: Elevation axis 0x00000080: Polarisation axis |
| 0A028-0 | ERROR | Demodulator load | The second receiver demodulator cannot be initialised and loaded correctly. |
| 0A029-0 | ERROR | XIM PLL lock | The PLL on the VIM/TIM does not lock. |
| 0A02B-0 | ERROR | ABS software version | The ABS software version in the antenna is too old to match the hardware requirements. Upload new software via the web interface. |
| 0A034-0 | WARNING | ACU communication | The communication link between ACU and antenna is not working. |
| 0A035-0 | WARNING | ISM data valid | Sensor measurements from the ISM are invalid. This indicates a malfunctioning ISM. |
| 0A036-0 | WARNING | ISM data range | Sensor measurements from the ISM are out of range. |
| 0A037-0 | WARNING | GNSS communication | Lost connection to the GNSS device. |
| 0A038-0 | WARNING | GNSS data range | Received information from the GNSS device which is out of range. |

Table E-2: Event messages for antenna (Continued)

| Event ID | Severity | Description | Explanation |
|---|---|---|---|
| 0A039-0 | WARNING | GNSS device warning | Local GNSS device warning. |
| 0A03A-0 | WARNING | GNSS device error | Local GNSS device error. |
| 0A03B-0 | ERROR | Azi DDM shutdown | The azimuth motor control has detected one of the following situations: Extreme temperature, voltage, current or velocity. The motor was then shut down. This is usually a temporary situation and is probably fixed by a restart of the system. |
| 0A03C-0 | ERROR | Xel DDM shutdown | As Azi DDM shutdown but detected by the cross-elevation motor control. |
| 0A03D-0 | ERROR | Ele DDM shutdown | As Azi DDM shutdown but detected by the elevation motor control. |
| 0A03E-0 | ERROR | PMM shutdown | As Azi DDM shutdown but detected by the polarisation motor control. |
| 0A03F-0 | WARNING | AMB timing | This indicates a busy situation. It may occur during installation procedures. No user interaction is required unless it occurs repeatedly. |
| 0A040-0 | WARNING | VIM cable attn | The output power cannot be controlled correctly. Check the Tx chain. |
| 0A041-0 | WARNING | BUC voltage low | The voltage for the BUC is too low, probably caused by a malfunctioning VIM or BUC. |
| 0A042-0 | WARNING | BUC voltage high | The voltage for the BUC is too high probably caused by a malfunctioning VIM. |
| 0A043-0 | WARNING | LNB voltage low | The voltage for the LNB is too low probably caused by a malfunctioning VIM/TIM or LNB. |
| 0A044-0 | WARNING | LNB voltage high | The voltage for the LNB is too high probably caused by a malfunctioning VIM/TIM. |
| 0A045-0 | WARNING | PMM fan | The fan is not working or the tacho input from the fan is not connected. Check fan cable and fan. |
| 0A046-0 | WARNING | Antenna temperature | The temperature of the antenna is too high. Check if the fan is working. |
| 0A047-0 | ERROR | VIM PLL lock | The PLL of the VIM/TIM is out of lock. Check the 10 MHz reference signal. |
| 0A048-0 | WARNING | VIM tuner lock | The PLL of the second receiver (DVB) is out of lock. Check the 10 MHz reference signal. |

Table E-2: Event messages for antenna (Continued)

| Event ID | Severity | Description | Explanation |
|---|---|---|---|
| 0A049-0 | WARNING | Azi encoder slip | A slip of the azimuth encoder has been detected. If this event is not resolved by itself after some time, check the belt and encoder of the azimuth axis. |
| 0A04A-0 | WARNING | Xel encoder slip | A slip of the cross-elevation encoder has been detected. If this event is not resolved by itself after some time, check the belt and encoder of the cross-elevation axis. |
| 0A04B-0 | WARNING | Ele encoder slip | A slip of the elevation encoder has been detected. If this event is not resolved by itself after some time, check the belt and encoder of the elevation axis. |
| 0A04C-0 | WARNING | Pol encoder slip | A slip of the polarisation encoder has been detected. If this event is not resolved by itself after some time, check the belt and encoder of the polarisation axis. |
| 0A04D-0 | WARNING | GNSS position | No position available from the GNSS device or position too old. |
| 0A04E-0 | WARNING | GNSS velocity | No velocity available from the GNSS device. |
| 0A04F-0 | WARNING | Heading data | Heading information is missing in the antenna. |
| 0A050-0 | ERROR | Azi DDM communication | Communication error between PCM and azimuth DDM. Check SUB-D connectors and cables. |
| 0A051-0 | ERROR | Xel DDM communication | Communication error between PCM and cross-elevation DDM. Check SUB-D connectors and cables. |
| 0A052-0 | ERROR | Ele DDM communication | Communication error between PCM and elevation DDM. Check SUB-D connectors and cables |
| 0A053-0 | ERROR | ISM communication | Communication error between PCM and ISM. Check SUB-D connectors and cables. |
| 0A054-0 | ERROR | PMM communication | Communication error between PCM and PMM. Check SUB-D connectors and cables. |
| 0A055-0 | WARNING | Azi DDM warning | The azimuth motor controller has temporarily observed an unusual situation for temperature, voltage, current or velocity. No user interaction required. |
| 0A056-0 | WARNING | Xel DDM warning | The cross-elevation motor controller has temporarily observed an unusual situation for temperature, voltage, current or velocity. No user interaction required. |
| 0A057-0 | WARNING | Ele DDM warning | The elevation motor controller has temporarily observed an unusual situation for temperature, voltage, current or velocity. No user interaction required. |

Table E-2: Event messages for antenna (Continued)

| Event ID | Severity | Description | Explanation |
|---|---|---|---|
| 0A058-0 | WARNING | PMM warning | The polarisation motor controller has temporarily observed an unusual situation with regards to temperature, voltage, current or velocity. No user interaction required. |
| 0A059-0 | WARNING | Azi cal. limits | Check limits of the calibration result for the azimuth axis are exceeded. Pointing performance may be degraded. Info: 0x00000040: End stop detected before expected limit 0x00000100: Zero width is low 0x00000200: Zero width is high 0x00000400: Zero slack is high 0x00001000: Friction average is high 0x00002000: Friction peak is high 0x00004000: Friction asymmetry is high Zero width low/high: Zero reference module placement may be incorrect. Zero slack high: Mechanical slack may be too high. Friction average/peak high: Mechanical friction is higher than expected. Friction asymmetry high: Mechanical imbalance may be too high. |
| 0A05A-0 | WARNING | Xel cal. limits | Check limits of the calibration result for the cross-elevation axis are exceeded. Pointing performance may be degraded. Info: See 0A059-0. |
| 0A05B-0 | WARNING | Ele cal. limits | Check limits of the calibration result for the elevation axis are exceeded. Pointing performance may be degraded. Info: See 0A059-0. |
| 0A05C-0 | WARNING | Pol cal. limits | Check limits of the calibration result for the polarisation axis are exceeded. Pointing performance may be degraded. Info: See 0A059-0. |
| 0A05D-0 | WARNING | ISM warning | The ISM has temporarily observed an unusual situation for temperature or voltage. No user interaction required. If repeated after cooldown and reboot, check if the ISM or cables around it are defective. |
| 0A05E-0 | WARNING | Low elevation | The antenna is not allowed to transmit because the elevation is too low. |
| 0A05F-0 | WARNING | Heading range | Heading data range error. External heading unit supplies unreliable data. |
| 0A062-0 | WARNING | High elevation | The antenna cannot perform acquisition in gyro-free mode because the elevation is too high. |
| 0A065-0 | ERROR | Deploy/Stow | Deploy/stow error. The antenna did not properly unlock (deploy), or the stow switch never closed (stow). |

Table E-2: Event messages for antenna (Continued)

# Approvals

This appendix lists the approvals for EXPLORER 8000 series, organized in sections based on system type.

- *EXPLORER 8100*
- *EXPLORER 8120*

## F.1 EXPLORER 8100

### F.1.1 Eutelsat

The EXPLORER 8100 Ka VSAT System is approved by Eutelsat. The certificate is added to this appendix in electronic copy.

The EXPLORER 8100 Ku VSAT System is in the process of being approved by Eutelsat. The certificate will be added to this appendix in electronic copy when ready.

### F.1.2 CE

The EXPLORER 8100 Ku VSAT System and the EXPLORER 8100 Ka VSAT System are CE certified as stated in the declarations of conformity enclosed at the end of this section in electronic copy.

The requirement with respect to LVD directive 2006/95/EC is met by conforming to harmonized EU standard EN 60950.

The protection requirement with respect to EMC directive 2004/108/EC is met by conforming to harmonized EU standard EN 61000.

Effective use of frequency spectrum is met by conforming to harmonized standard EN 301 489.

### F.1.3 FCC

**Note**: This equipment has been tested and found to comply with the limits for a Class B digital device, pursuant to part 15 of the FCC Rules. These limits are designed to provide reasonable protection against harmful interference in a residential installation. This equipment generates, uses and can radiate radio frequency energy and, if not installed and used in accordance with the instructions, may cause harmful interference to radio communications. However, there is no guarantee that interference will not occur in a particular installation. If this equipment does cause harmful interference to radio or television reception, which can be determined by turning the equipment off and on, the user is encouraged to try to correct the interference by one or more of the following measures:

- Reorient or relocate the receiving antenna

- Increase the separation between the equipment and receiver
- Connect the equipment into an outlet on a circuit different from that to which the receiver is connected
- Consult the dealer or an experienced radio/TV technician for help

**NOTICE**:

This device complies with Part 15 of the FCC Rules.

Operation is subject to the following two conditions:

(1) this device may not cause harmful interference, and

(2) this device must accept any interference received, including interference that may cause undesired operation.

**NOTICE**:

Changes or modifications made to this equipment not expressly approved by Cobham SATCOM may void the FCC authorization to operate this equipment.

FCC id for EXPLORER 8100 Ku VSAT System: ROJ-8157A

FCC id for EXPLORER 8100 Ka VSAT System: ROJ-8157B

### F.1.4 IC

This device complies with Industry Canada licence-exempt RSS standard(s). Operation is subject to the following two conditions:

(1) this device may not cause interference, and

(2) this device must accept any interference, including interference that may cause undesired operation of the device.

Le présent appareil est conforme aux CNR d'Industrie Canada applicables aux appareils radio exempts de licence. L'exploitation est autorisée aux deux conditions suivantes :

(1) l'appareil ne doit pas produire de brouillage, et

(2) l'utilisateur de l'appareil doit accepter tout brouillage radioélectrique subi, même si le brouillage est susceptible d'en compromettre le fonctionnement.

This Class [B] digital apparatus complies with Canadian ICES-003.

Cet appareil numérique de la classe [B] est conforme à la norme NMB-003 du Canada.

IC id for EXPLORER 8100 Ku VSAT System : 6200B-8157A

IC id for EXPLORER 8100 Ka VSAT System : 6200B-8157B

# **Eutelsat** S.A. Type Approval Summary Sheet

**Applicant:**

Thrane & Thrane A/S trading as Cobham SATCOM
Lundtoftegaardsvej 93 D
2800 Kgs. Lyngby Denmark

Tel.: +45 3955 8800

Contact person: Henrik O. Christensen

Website: www.cobham.com
mailto: Henrik.christensen@cobham.com

**Antenna model:**
EXPLORER 8100 Ka
With Viasat E TRIA

**Diameter:**
1 m

**Standard:**
M

**Type Approval (Ref. EB-028) date:**
21-08-2015

**Most recent test data received on:**
13-08-2015

**System Description:**
Vehicular mounted auto-deploy system with Cobham ACU using Viasat E TRIA for KA-SAT operation. Single piece 1.00 m Carbon fiber reflector for long focal length. Motorized auto-deploy AZ/EL mount, heavy and stable antenna back structure and feed boom. Single optic front fed offset.

**Configurations:** Antenna presented and tested works Viasat network on KA-SAT using the Viasat E TRIA. Antenna is designed for an exchange of the RF front end and for operation in Ku band. Antenna need an additional approval for operation in Ku band.

**Maximum Allowed EIRP** for digital carriers transmitted at the 18 dB/K satellite receive contour of KA-SAT (EESS 502 refers):
20.2 dBW / 4 KHz (equivalent to 30.2 dBW / 40 kHz) for an orbital separation of the adjacent satellite ≥ 1.5°

**Tx Frequency:**
29.50-30.00 GHz

**Rx Frequency:**
19.70-20.20 GHz

**Tx Gain:**
47.7 dBi (average at 29.75 GHz)

**Rx Gain:**
44.1 dBi (average at 19.95 GHz)

**Tx XPD:**
≥ 20.5 dB within -1 dB contour

**Rx XPD:**
≥ 20.4 dB within -1 dB contour

**Pointing Error:**
≤ 0.2° @ 72 Km/h

**G/T:**
22.2 dB/K, assuming the Viasat E TRIA with 1.5 dB NF

## Restrictions and remarks:

1) The terminal shall be used solely in VSAT Networks which are conformed with the EU regulations for blanket license agreement. Otherwise the operator has to be in possession of an operating license for above mentioned terminal from its local regulatory office.
2) The authorization to operate the terminal is conditioned to the approval to access the Eutelsat S.A. Space Segment (ref. http://www.eutelsat.com/files/contributed/satellites/pdf/esog110.pdf ESOG110).
3) This type approval has been performed at the outdoor test range of Politecnico di Torino on three units of the same model, in the month of August 2015.
4) The type approval's validity is subject to regular submission of patterns to confirm that the system remains compliant with the Eutelsat standard at the inspection date.
5) Any change to the type approved configuration needs to be notified to Eutelsat and may be subject to further tests.
6) This approval allows only operation in Viasat technology networks on KA-SAT.
7) The antenna system can only be operated for maximum wind speeds of up to 72 Km/h (45mph).

# Declaration of Conformity

COBHAM

Hereby declares **Thrane & Thrane A/S** by this letter that the following equipment complies with the specifications of:

- **R&TTE directive 1999/5/EC** concerning Radio & Telecommunications Terminal Equipment as described in harmonized EU standards EN 301 428 V1.3.1; EN 301 430 V1.1.1.
- **LVD directive 2014/35/EC** concerning Low Voltage equipment as described in harmonized EU standard EN 60950-1:2006 + A11:2009 + A1:2010 + A12:2011; EN60950-22:2006 + A11:2008.
- **EMC directive 2014/30/EC** concerning EMC disturbances is met by conforming to the harmonized EU standards EN 301 489-1 V1.9.2; EN 301 489-12 V2.2.2; EN 55022:2010/AC:2011
- **Federal Communication Commission**, FCC as described in 47CFR Part 25 (Title 47 of the Code of Federal Regulations; Chapter 1; Part 25 – Satellite Communications
- **Industry Canada** as described in IC SRSP-101, Technical Requirements for Fixed Earth Stations Operating Above 1 GHz in Space Radiocommunication Services and Earth Stations On Board Vessels (ESVs) Operating in the Fixed- Satellite Service.

**Equipment included in this declaration**

TT-8157A EXPLORER 8100 Ku VSAT Antenna System consisting of:

| | | |
|---|---|---|
| TT-7140A | EXPLORER Antenna Control Unit (ACU) | PN = 407140A |
| TT-8147A | EXPLORER 8100 Ku VSAT Antenna | PN = 408147A |

**Equipment Applicability**

TT-8157A EXPLORER 8100 System consists of an antenna unit and an ACU (Antenna Control Unit).It is a system that provides two-way satellite voice/data broadband communication featuring stabilization to minimize impact from minor movements in vehicle. The system assumes use of a 3rd Party Ku-band modem unit. The system can transmit to and receive from any desired Ku-band satellite, which has adequate signal coverage.

**Manufacturer**

Thrane & Thrane A/S — Lundtoftegårdsvej 93D, DK-2800 Kgs. Lyngby, Denmark
Industrivej 30, DK- 9490 Pandrup, Denmark

**Place and date**

Kgs. Lyngby, October 4, 2016

Vibeke Fink, Director of Antenna R&D
Thrane & Thrane A/S

CE

MANAGEMENT SYSTEM CERTIFICATION
DNV·GL
ISO 9001 = ISO 14001

Document no.: 99-149583-A

# Declaration of Conformity

COBHAM

Hereby declares **Thrane & Thrane A/S** by this letter that the following equipment complies with the specifications of:

- **R&TTE directive 1999/5/EC** concerning Radio & Telecommunications Terminal Equipment as described in harmonized EU standard EN 301 459 V1.4.1.

- **LVD directive 2014/35/EC** concerning Low Voltage equipment as described in harmonized EU standard EN 60950-1:2006 + A11:2009 + A1:2010 + A12:2011; EN60950-22.2006 + A11:2008.

- **EMC directive 2014/30/EC** concerning EMC disturbances is met by conforming to the harmonized EU standards EN 301 489-1 V1.9.2; EN 301 489-12 V2.2.2; EN 55022:2010/AC:2011

- **Federal Communication Commission**, FCC as described in 47CFR Part 25 (Title 47 of the Code of Federal Regulations; Chapter 1; Part 25 – Satellite Communications

- **Industry Canada** as described in IC SRSP-101, Technical Requirements for Fixed Earth Stations Operating Above 1 GHz in Space Radiocommunication Services and Earth Stations On Board Vessels (ESVs) Operating in the Fixed- Satellite Service.

**Equipment included in this declaration**

TT-8157B EXPLORER 8100 Ka VSAT Antenna System consisting of:

| | | |
|---|---|---|
| TT-7140A | EXPLORER Antenna Control Unit (ACU) | PN = 407140A |
| TT-8147B | EXPLORER 8100 Ka VSAT Antenna | PN = 408147B |

**Equipment Applicability**

TT-8157B EXPLORER 8100 System consists of an antenna unit and an ACU (Antenna Control Unit).It is a system that provides two-way satellite voice/data broadband communication featuring stabilization to minimize impact from minor movements in the vehicle. The system assumes use of a 3rd Party Ka-band modem unit. The system can transmit to and receive from any desired Ka-band satellite, which has adequate signal coverage.

**Manufacturer**

Thrane & Thrane A/S — Lundtoftegårdsvej 93D, DK-2800 Kgs. Lyngby, Denmark
Industrivej 30, DK- 9490 Pandrup, Denmark

**Place and date**

Kgs. Lyngby, October 4, 2016

Vibeke Fink, Director of Antenna R&D
Thrane & Thrane A/S

CE

MANAGEMENT SYSTEM CERTIFICATION
DNV·GL
ISO 9001 = ISO 14001

Document no : 99-149583-A

# F.2 EXPLORER 8120

## F.2.1 Eutelsat

The EXPLORER 8120 is in the process of being approved by Eutelsat. The certificate will be added to this appendix in electronic copy when ready.

## F.2.2 CE

The EXPLORER 8120 is in the process of being CE certified. The Declaration of Conformity will be added to this appendix in electronic copy when ready.

The requirement with respect to LVD directive 2006/95/EC is met by conforming to harmonized EU standard EN 60950.

The protection requirement with respect to EMC directive 2004/108/EC is met by conforming to harmonized EU standard EN 61000.

Effective use of frequency spectrum is met by conforming to harmonized standard EN 301 489.

## F.2.3 FCC

**Note**: This equipment has been tested and found to comply with the limits for a Class B digital device, pursuant to part 15 of the FCC Rules. These limits are designed to provide reasonable protection against harmful interference in a residential installation. This equipment generates, uses and can radiate radio frequency energy and, if not installed and used in accordance with the instructions, may cause harmful interference to radio communications. However, there is no guarantee that interference will not occur in a particular installation. If this equipment does cause harmful interference to radio or television reception, which can be determined by turning the equipment off and on, the user is encouraged to try to correct the interference by one or more of the following measures:

- Reorient or relocate the receiving antenna
- Increase the separation between the equipment and receiver
- Connect the equipment into an outlet on a circuit different from that to which the receiver is connected
- Consult the dealer or an experienced radio/TV technician for help

**NOTICE**:

This device complies with Part 15 of the FCC Rules.

Operation is subject to the following two conditions:

(1) this device may not cause harmful interference, and

(2) this device must accept any interference received, including interference that may cause undesired operation.

**NOTICE**:

Changes or modifications made to this equipment not expressly approved by Cobham SATCOM may void the FCC authorization to operate this equipment.

FCC id : ROJ-8158A

## F.2.4 IC

This device complies with Industry Canada licence-exempt RSS standard(s). Operation is subject to the following two conditions:

(1) this device may not cause interference, and

(2) this device must accept any interference, including interference that may cause undesired operation of the device.

Le présent appareil est conforme aux CNR d'Industrie Canada applicables aux appareils radio exempts de licence. L'exploitation est autorisée aux deux conditions suivantes :

(1) l'appareil ne doit pas produire de brouillage, et

(2) l'utilisateur de l'appareil doit accepter tout brouillage radioélectrique subi, même si le brouillage est susceptible d'en compromettre le fonctionnement.

This Class [B] digital apparatus complies with Canadian ICES-003.

Cet appareil numérique de la classe [B] est conforme à la norme NMB-003 du Canada.

IC id : 6200B-8158A

## A

| | |
|---|---|
| ABS | ADU Bus Slave |
| ACU | Antenna Control Unit |
| ADM | ACU Digital Module. A main processor board in the ACU. |
| AMB | Antenna Module Bus |

## B

| | |
|---|---|
| BUC | Block Up Converter. The BUC can be thought of as the “transmitter”, and its actions are effectively the opposite to the LNB. The BUC consists of the Up Converter and HPA. |

## C

| | |
|---|---|
| CE | Conformité Européenne. This term signifies that a CE certified product conforms to European health, environmental, and safety regulations. In short, it makes the product legal to be sold in the European Union. |
| CM | Continuous Monitoring |

## D

| | |
|---|---|
| DHCP | Dynamic Host Configuration Protocol. A protocol for assigning dynamic IP addresses to devices on a network. With dynamic addressing, a device can have a different IP address every time it connects to the network. |
| DVB | Digital Video Broadcasting, a set of standards relating to digital television. |

## E

| | |
|---|---|
| eTRIA | Transmit and Receive Integrated Assembly |

## F

| | |
|---|---|
| FPGA | Field Programmable Gate Array |
| FWG | Flexible Wave Guide |

## G

| | |
|---|---|
| GNSS | Global Navigation Satellite System, e.g. GPS. |

GPS — Global Positioning System. A system of satellites, computers, and receivers that is able to determine the latitude and longitude of a receiver on Earth by calculating the time difference for signals from different satellites to reach the receiver.

## K

KDM — Keyboard and Display Module of the ACU

## L

LAN — Local Area Network. A computer network covering a small physical area, like a home, office, school or airport. The defining characteristics of LANs, in contrast to wide-area networks (WANs), include their usually higher data-transfer rates, smaller geographic area, and lack of a need for leased telecommunication lines.

LED — Light Emitting Diode

LNB — Low Noise Blockdown converter. A device used to amplify or boost the weak received signal without amplifying the noise signals (hence the “low noise” part of LNB) and to convert the high frequencies of the signal into lower frequencies, a process called down converting, for conveyance to the indoor equipment (demodulator) for processing.

## M

MIB — Management Information Base

## O

ODU — OutDoor Unit. The part of the system that is placed outdoors, e.g. the antenna.

OMT — Ortho Mode Transducer

## P

PAST — Person Activated Self Test

POST — Power On Self Test. A system test that is activated each time the system is powered on.

## R

RF — Radio Frequency. Electromagnetic wave frequencies between about 3 kHz and about 300 GHz including the frequencies used for communications signals (radio, television, cell-phone and satellite transmissions) or radar signals.

## S

SMA — SubMiniature version A. A coaxial RF connector developed as a minimal connector interface for coaxial cable with a screw type coupling mechanism. The connector has a 50 Ohm impedance.

SSID — Service Set IDentifier. An SSID is the name of a wireless local area network (WLAN). All wireless devices on a WLAN must use the same SSID in order to communicate with each other.

## U

UCLI — User Command Line Interface

## V

VSAT — Very Small Aperture Terminal. An earthbound station used in satellite communications of data, voice and video signals, excluding broadcast television. A VSAT system consists of a two-way satellite ground station and a stabilized VSAT antenna with a dish antenna that is smaller than 3 metres.

## W

WLAN — Wireless LAN, wireless network

## Numerics



## A



## B



## C

## D



## E



## F



## G



## H



## I

## K



## L



## M



## N



## O



## P

## R



## S



## T

## U



## V



## W



## Z